

TOP VIEW

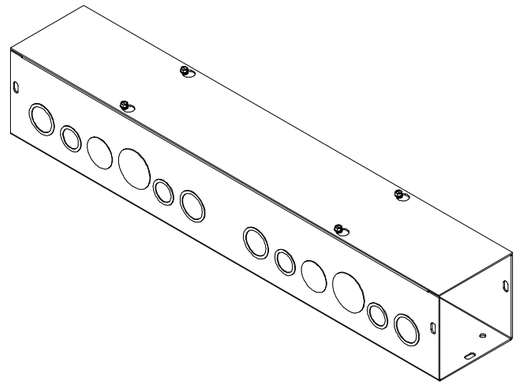

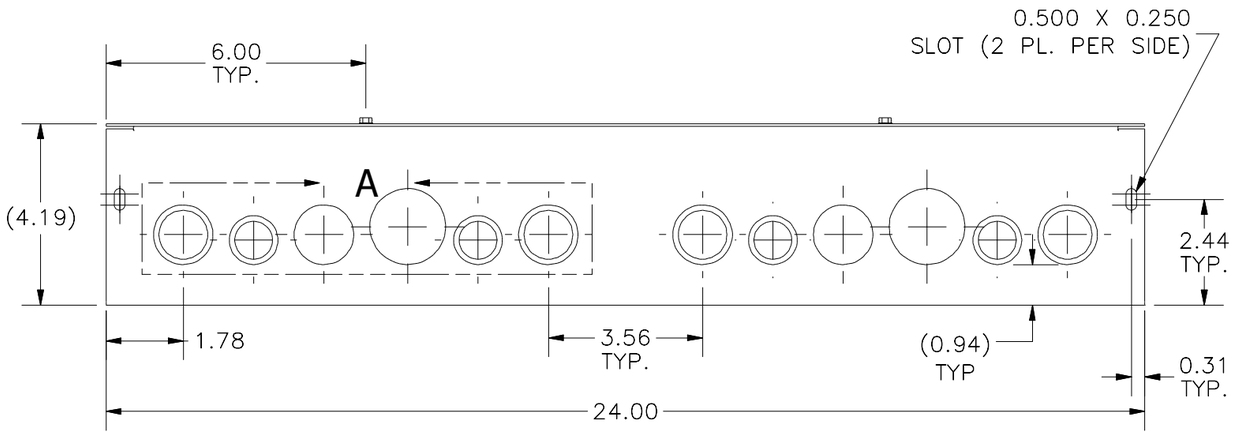

FRONT VIEW

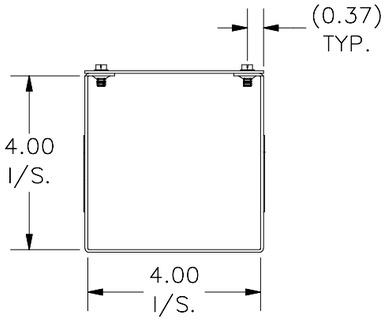

RIGHT VIEW

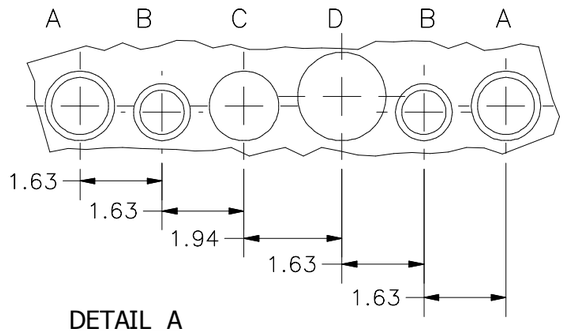

DETAIL A
PATTERN DESCRIPTION (4 PL.)

A) 3/4"-1" CONCENTRIC KO (2 PL.)
B) 1/2"-3/4" CONCENTRIC KO (2 PL.)
C) 1" SOLID KO
D) 1 1/4" SOLID KO

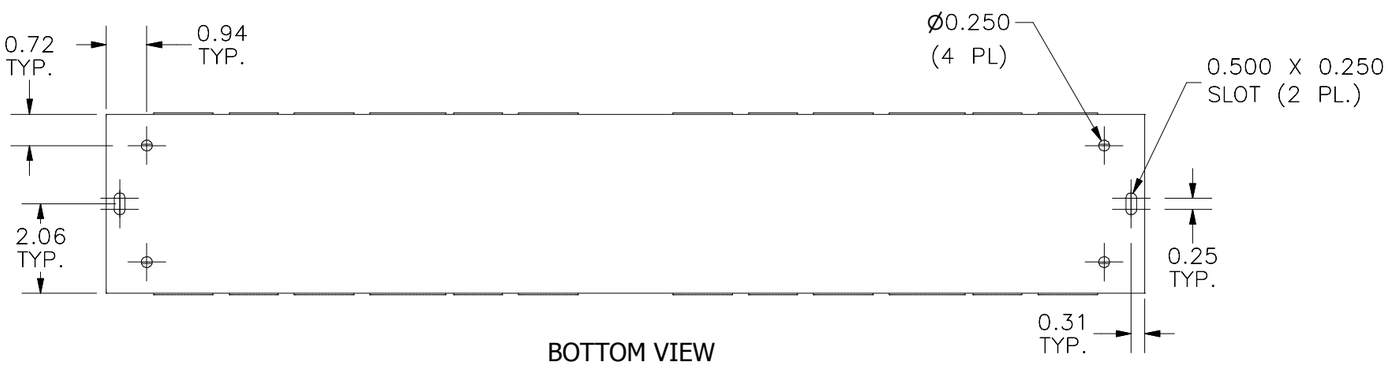

BOTTOM VIEW

PART#: S4424G
(DATA SUBJECT TO CHANGE WITHOUT NOTICE)

THIS DRAWING IS PROPERTY OF HUBBELL INC. WIEGMANN
ALL INFORMATION IS PROPRIETARY AND NOT TO BE DUPLICATED