

TOP VIEW

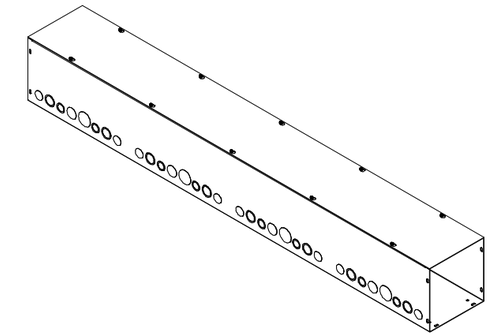

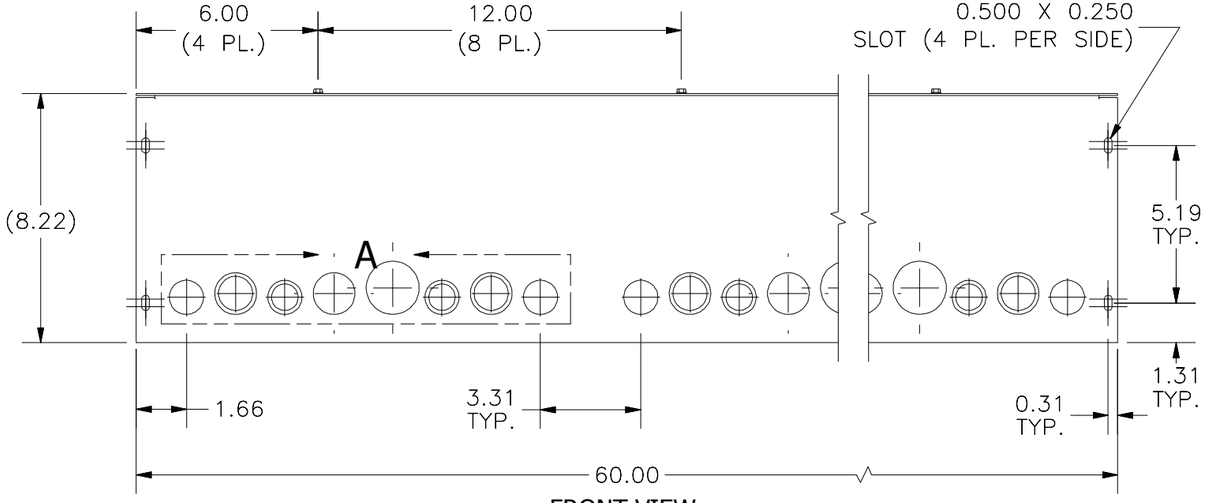

FRONT VIEW

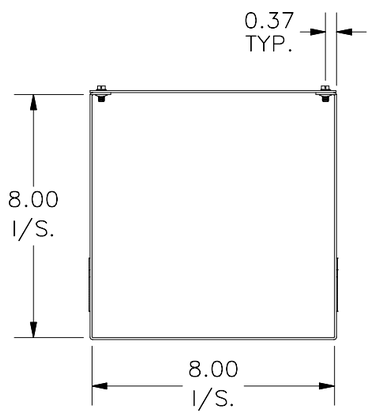

RIGHT VIEW

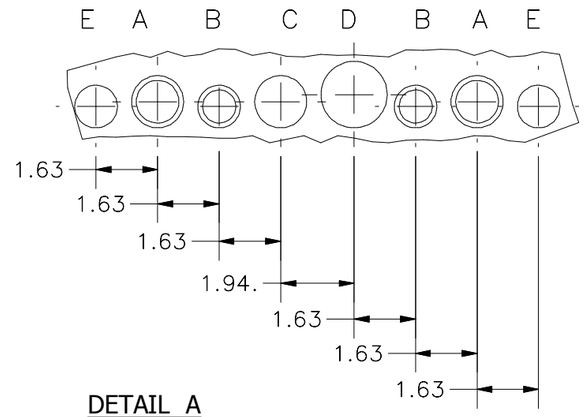

DETAIL A
PATTERN DESCRIPTION (8 PL.)

A) 3/4"-1" CONCENTRIC KO (2 PL.)
B) 1/2"-3/4" CONCENTRIC KO (2 PL.)
C) 1" SOLID KO (1 PL.)
D) 1 1/4" SOLID KO (1 PL.)
E) 3/4 SOLID KO (2 PL.)

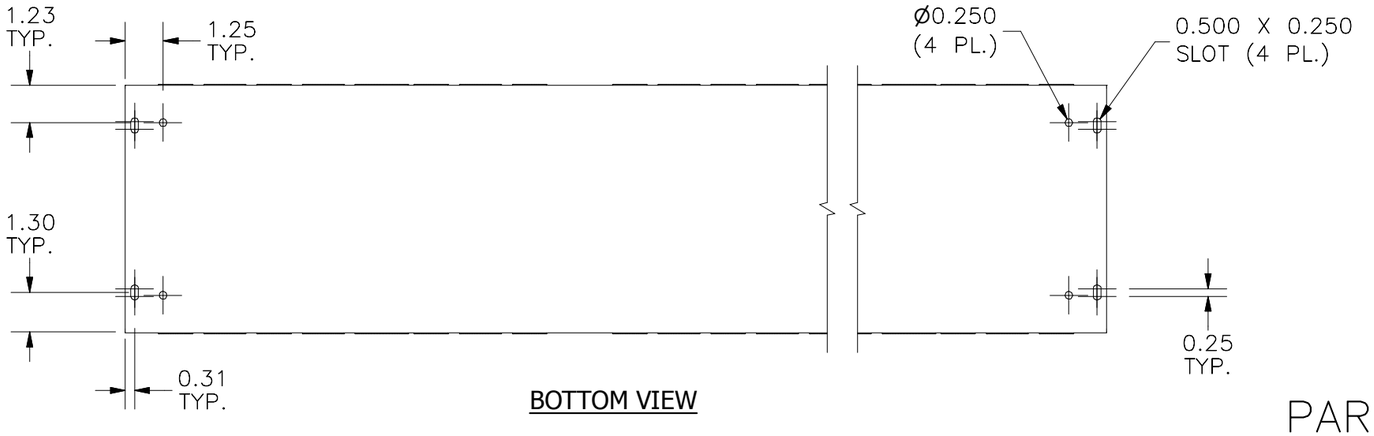

BOTTOM VIEW

PART#: S8860
(DATA SUBJECT TO CHANGE WITHOUT NOTICE)

THIS DRAWING IS PROPERTY OF HUBBELL INC. WIEGMANN
ALL INFORMATION IS PROPRIETARY AND NOT TO BE DUPLICATED