

TOP VIEW

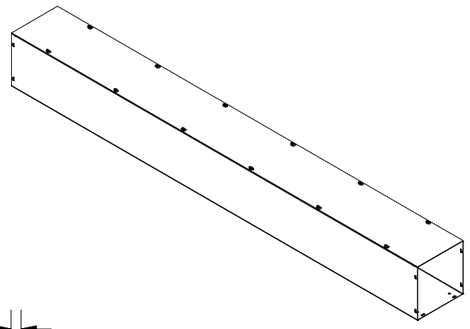

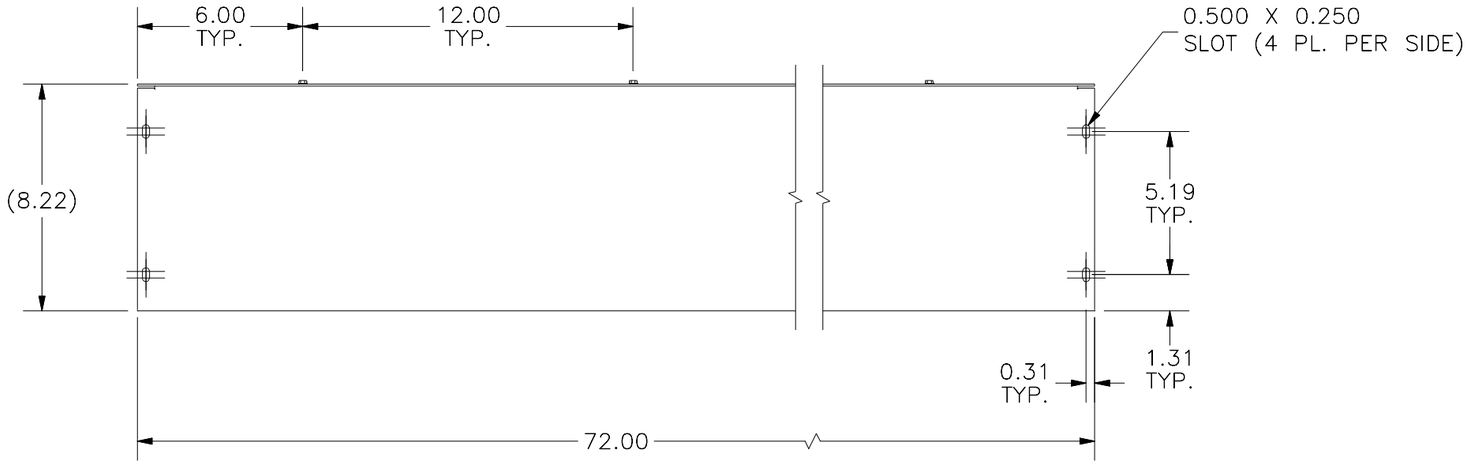

FRONT VIEW

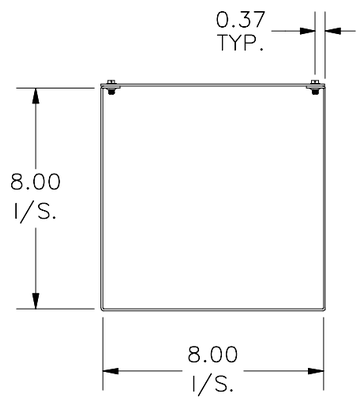

RIGHT VIEW

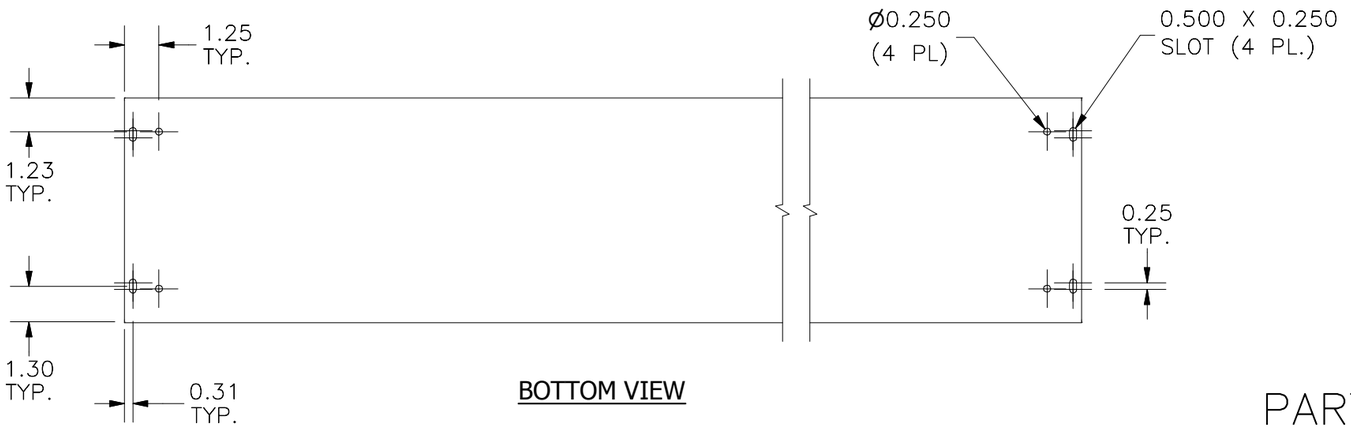

BOTTOM VIEW

PART#: S8872GNK
(DATA SUBJECT TO CHANGE WITHOUT NOTICE)

THIS DRAWING IS PROPERTY OF HUBBELL INC. WIEGMANN
ALL INFORMATION IS PROPRIETARY AND NOT TO BE DUPLICATED