

DETAIL A

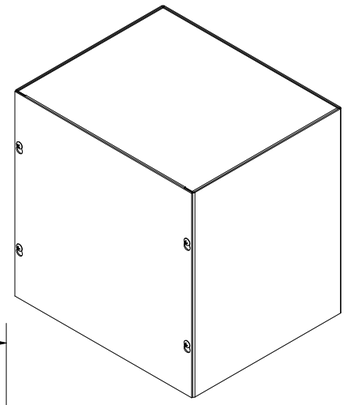

TOP VIEW

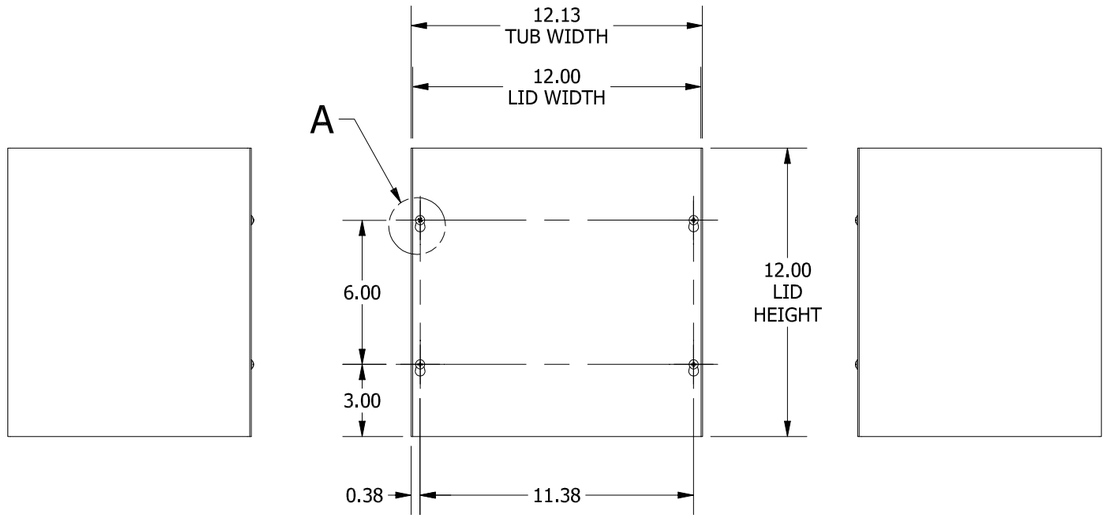

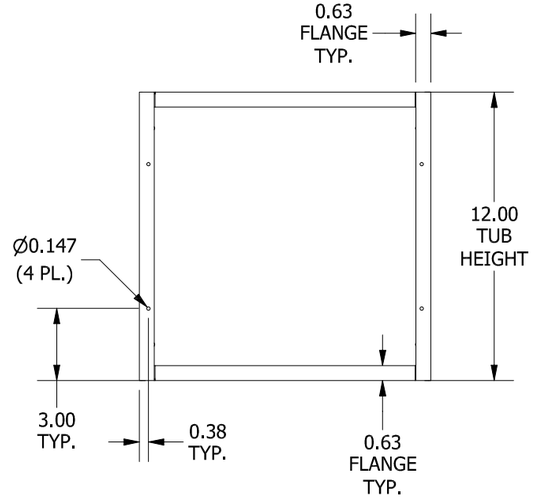

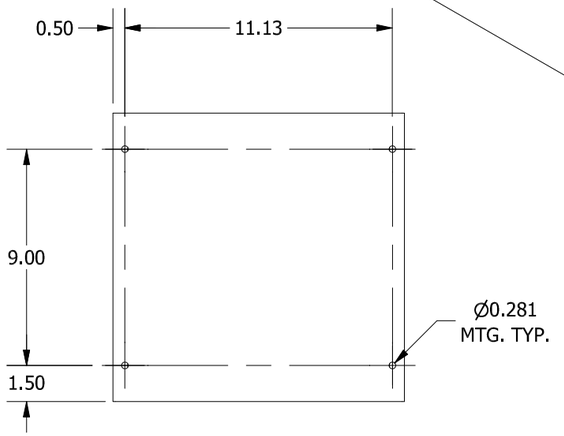

LEFT SIDE VIEW

FRONT VIEW

RIGHT SIDE VIEW

FRONT VIEW LID REMOVED

BACK VIEW

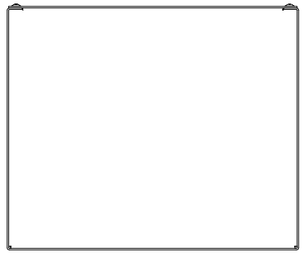

BOTTOM VIEW

PART#: SC121210NK
(DATA SUBJECT TO CHANGE WITHOUT NOTICE)

THIS DRAWING IS PROPERTY OF HUBBELL INC. WIEGMANN
ALL INFORMATION IS PROPRIETARY AND NOT TO BE DUPLICATED