

TOP VIEW

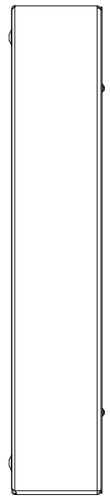

LEFT SIDE VIEW

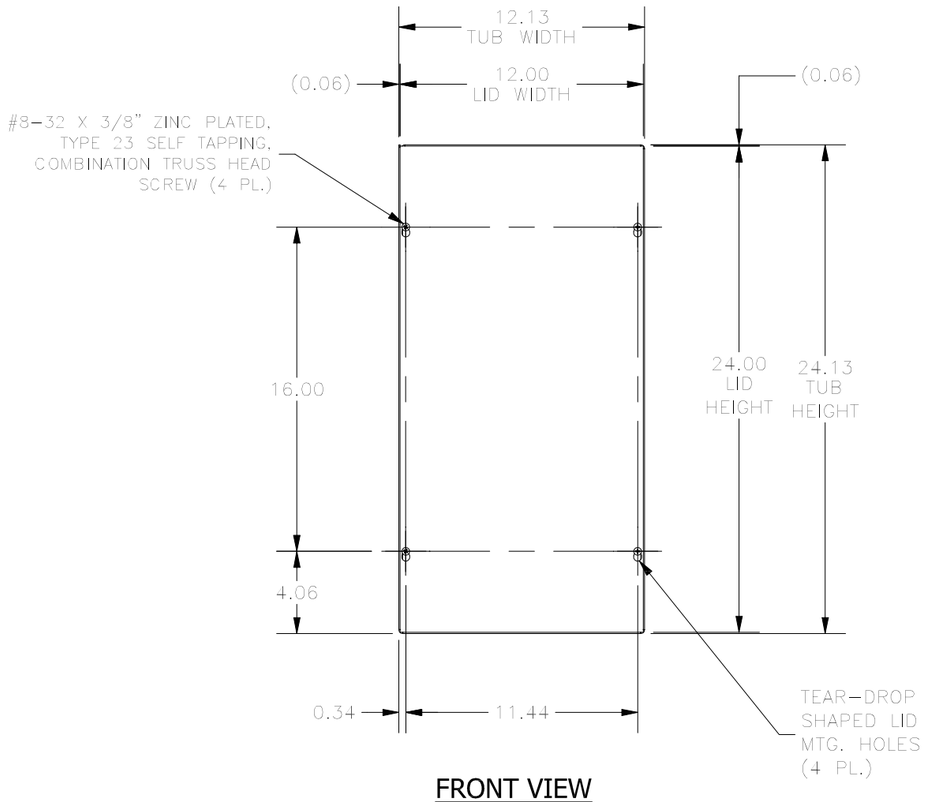

FRONT VIEW

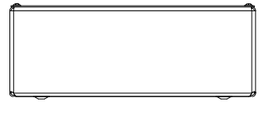

BOTTOM VIEW

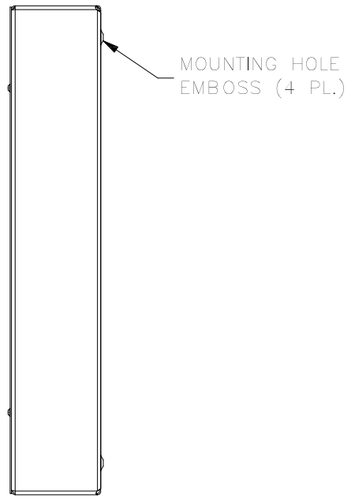

RIGHT SIDE VIEW

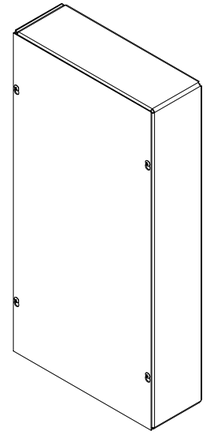

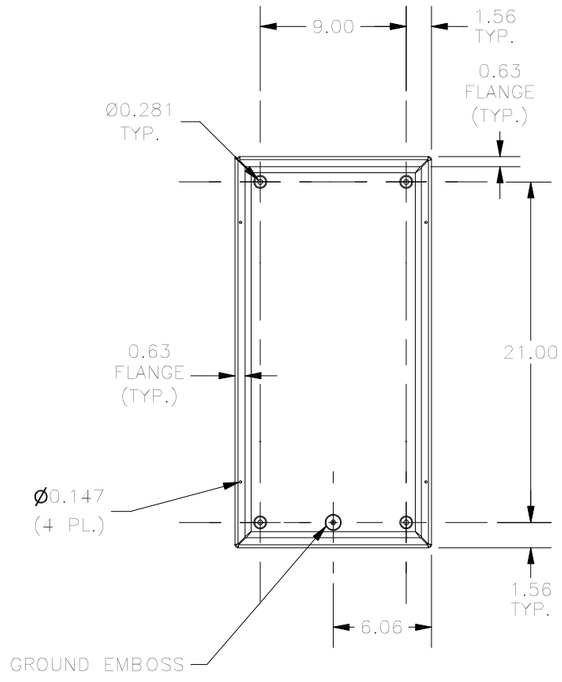

FRONT VIEW LID REMOVED

PART#: SC122404NK
(DATA SUBJECT TO CHANGE WITHOUT NOTICE)

THIS DRAWING IS PROPERTY OF HUBBELL INC. WIEGMANN
ALL INFORMATION IS PROPRIETARY AND NOT TO BE DUPLICATED