


TOP VIEW




DETAIL A

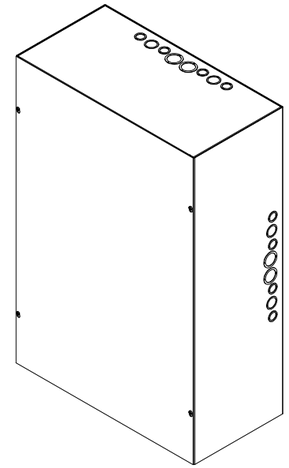

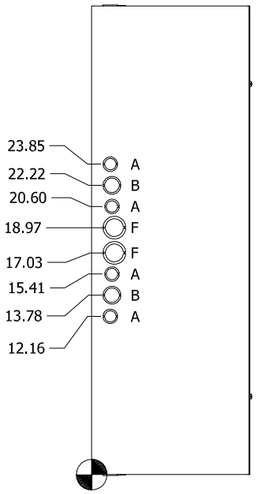


LEFT SIDE VIEW

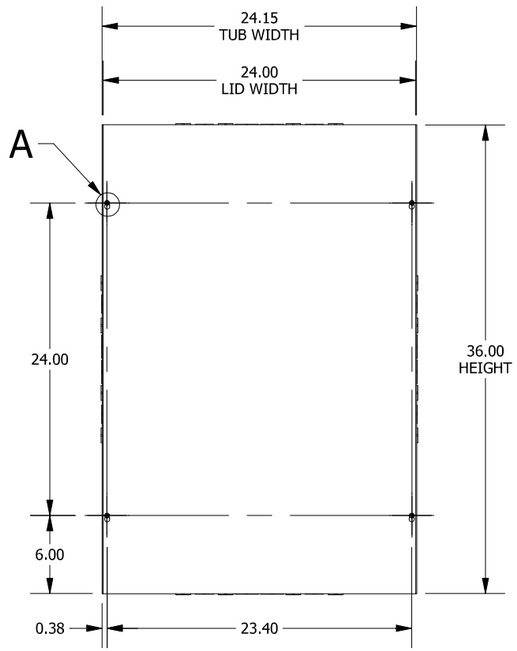


FRONT VIEW

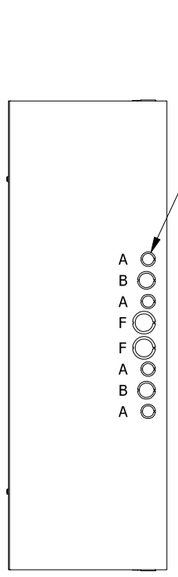


RIGHT SIDE VIEW

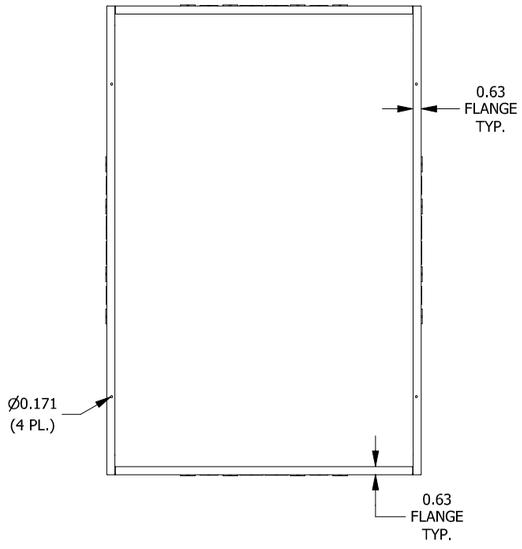


FRONT VIEW LID REMOVED

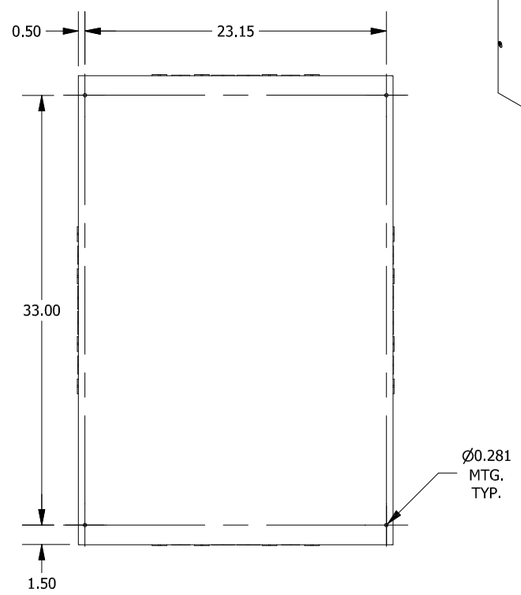


BACK VIEW

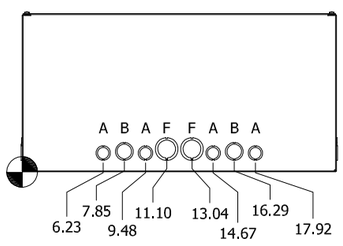


BOTTOM VIEW

| KNOCKOUT TABLE | |
|---|---|
| SIZE | DESCRIPTION |
| A | 1/2" TO 3/4" |
| B | 3/4 TO 1" |
| F | 1" TO 1-1/4" |

PART#: SC243612
(DATA SUBJECT TO CHANGE WITHOUT NOTICE)

THIS DRAWING IS PROPERTY OF HUBBELL INC. WIEGMANN
ALL INFORMATION IS PROPRIETARY AND NOT TO BE DUPLICATED