


TOP VIEW

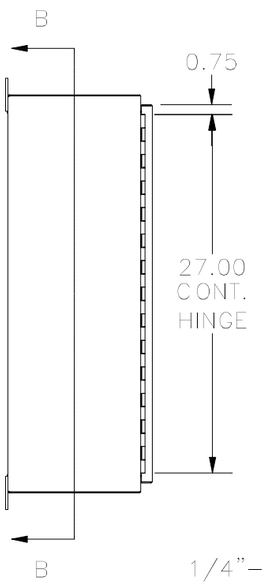


LEFT VIEW

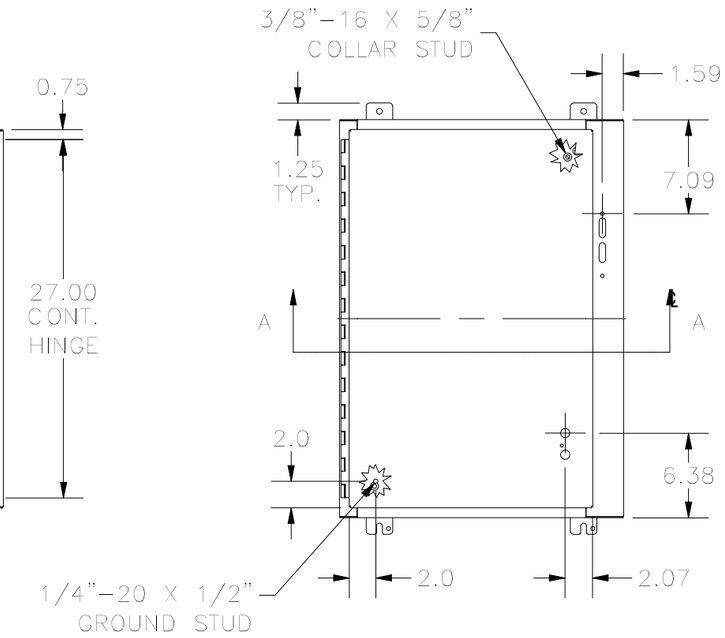


FRONT VIEW




RIGHT VIEW

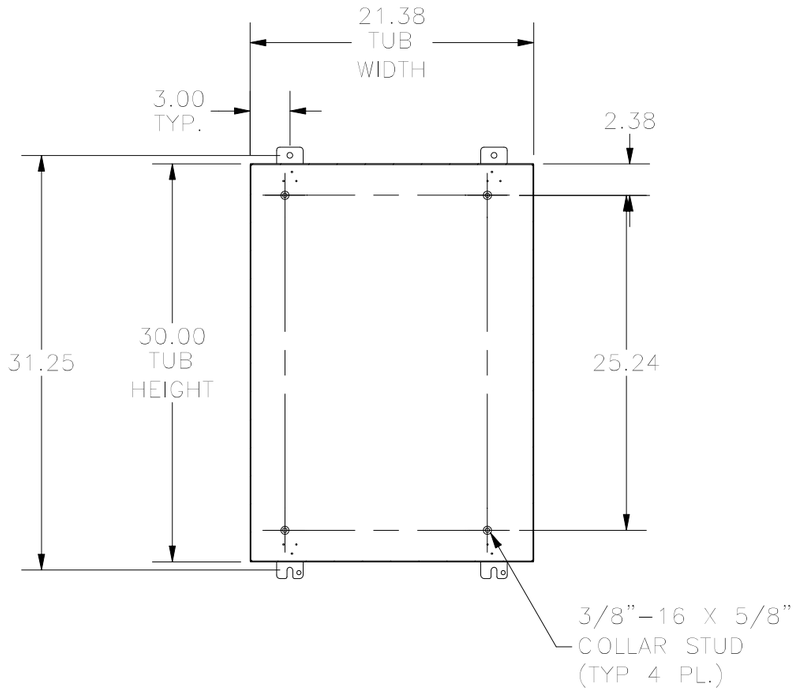


SECTION B-B
(INSIDE BACK OF ENCLOSURE)

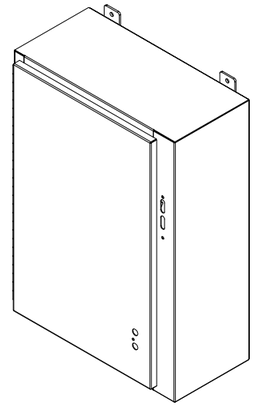

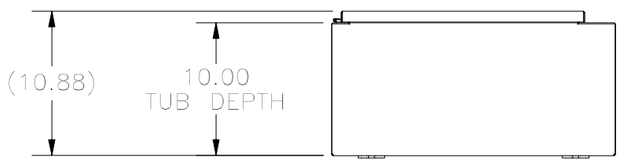


BOTTOM VIEW

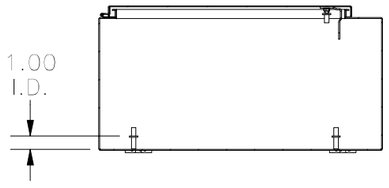


SECTION A-A
(INSIDE TOP OF ENCLOSURE)

PART#: SDN12302110
(DATA SUBJECT TO CHANGE WITHOUT NOTICE)

THIS DRAWING IS PROPERTY OF HUBBELL INC. WIEGMANN
ALL INFORMATION IS PROPRIETARY AND NOT TO BE DUPLICATED