

TOP VIEW

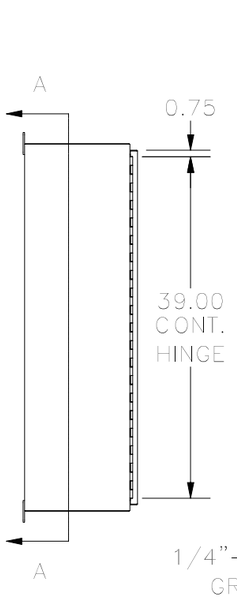

LEFT SIDE

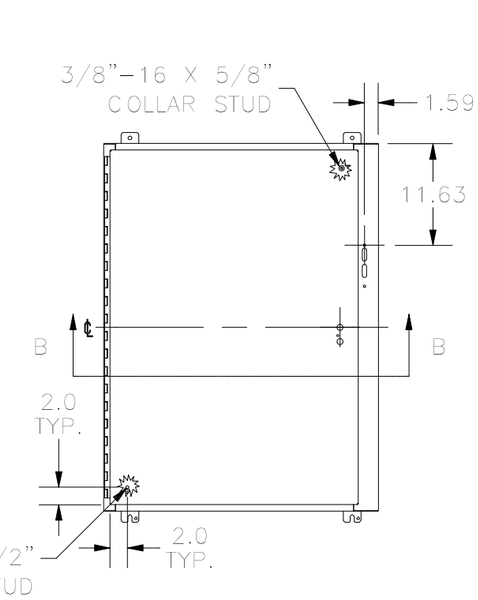

FRONT VIEW

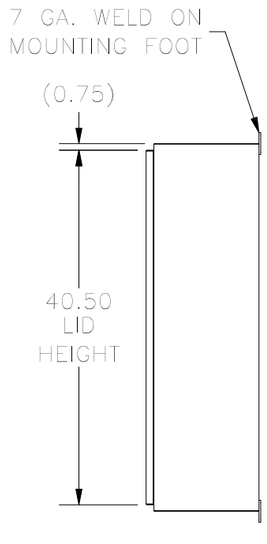

RIGHT SIDE

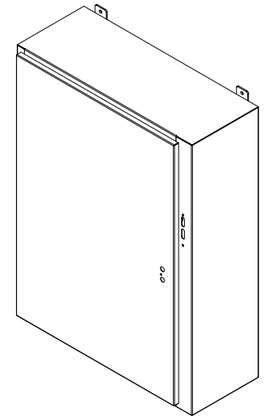

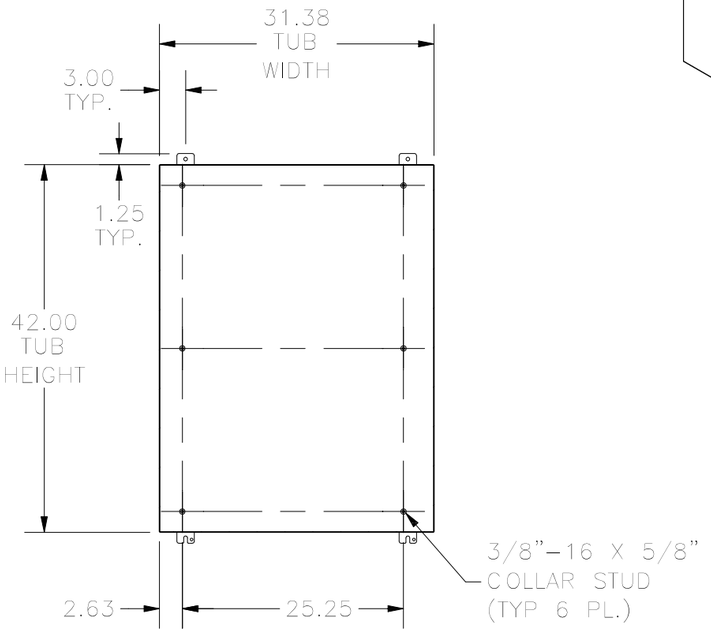

SECTION A-A
(INSIDE BACK OF TUB)

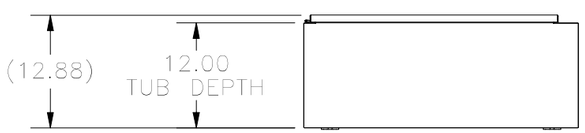

BOTTOM VIEW

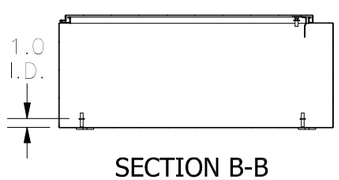

SECTION B-B
(INSIDE TOP OF ENCLOSURE)

PART#: SDN12423212
(DATA SUBJECT TO CHANGE WITHOUT NOTICE)

THIS DRAWING IS PROPERTY OF HUBBELL INC. WIEGMANN
ALL INFORMATION IS PROPRIETARY AND NOT TO BE DUPLICATED