

TOP VIEW

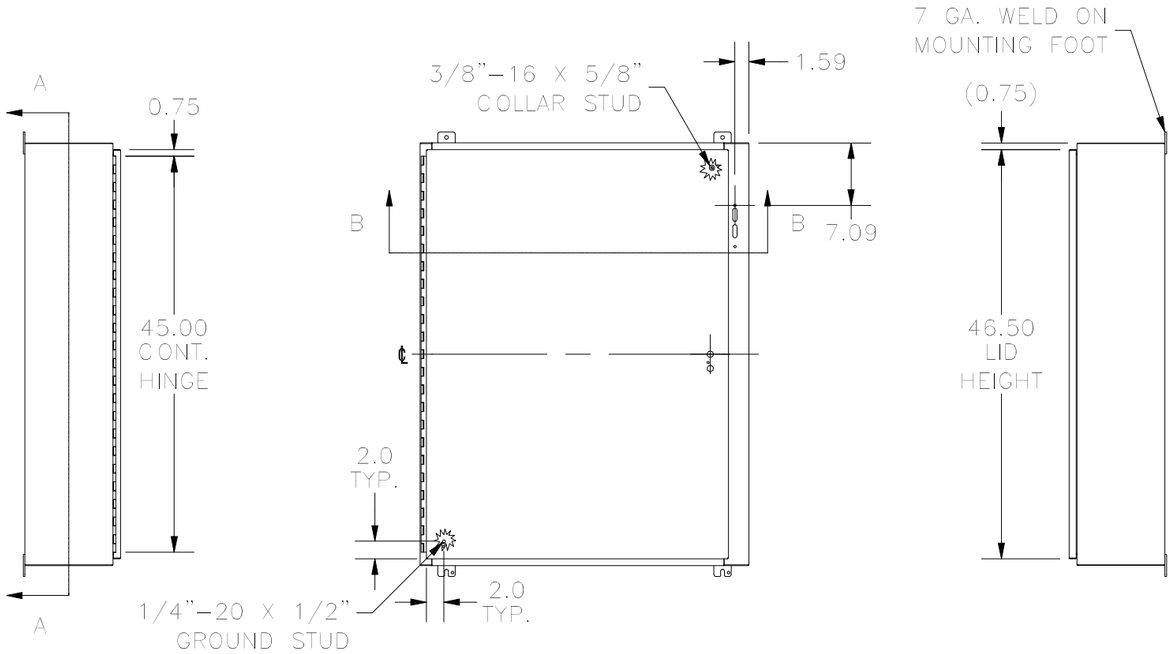

LEFT SIDE

FRONT VIEW

RIGHT SIDE

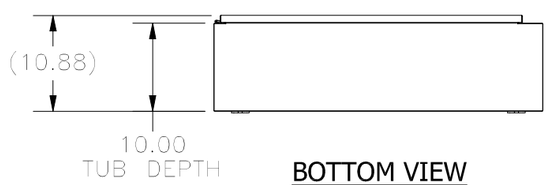

BOTTOM VIEW

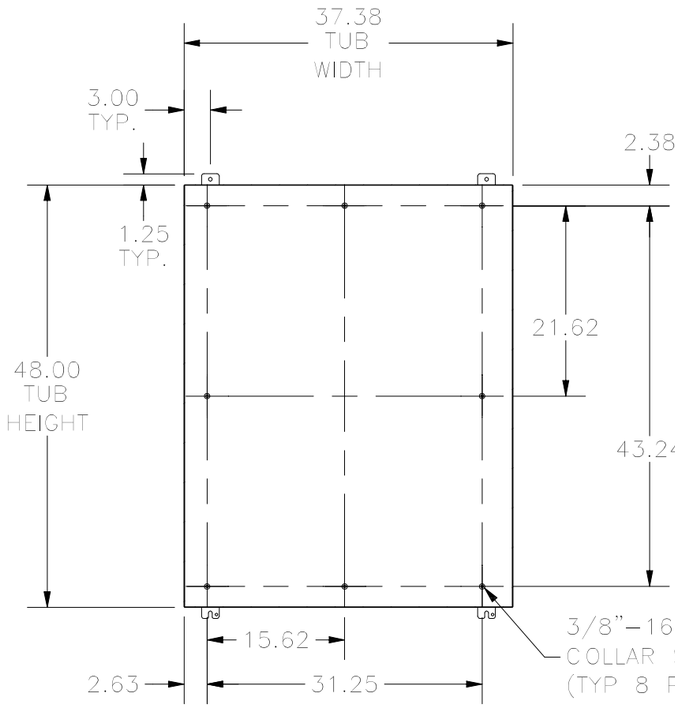

SECTION A-A
(INSIDE BACK OF TUB)

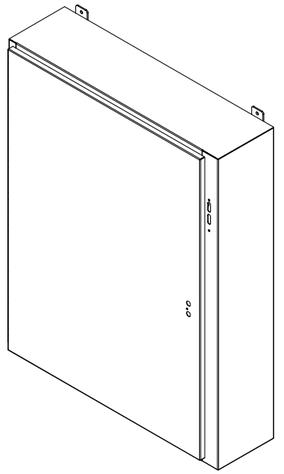

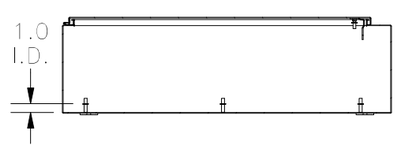

SECTION B-B
(INSIDE TOP OF ENCLOSURE)

PART#: SDN12483710
(DATA SUBJECT TO CHANGE WITHOUT NOTICE)

THIS DRAWING IS PROPERTY OF HUBBELL INC. WIEGMANN
ALL INFORMATION IS PROPRIETARY AND NOT TO BE DUPLICATED