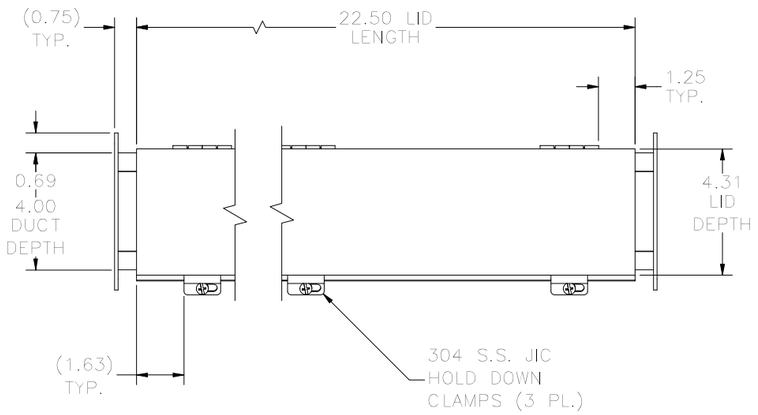

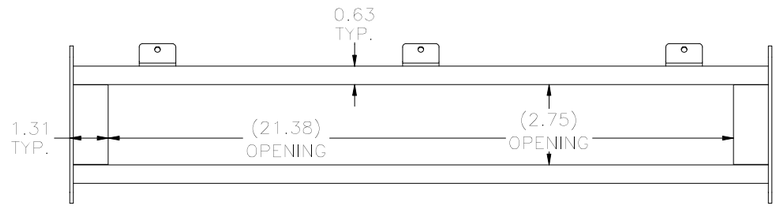

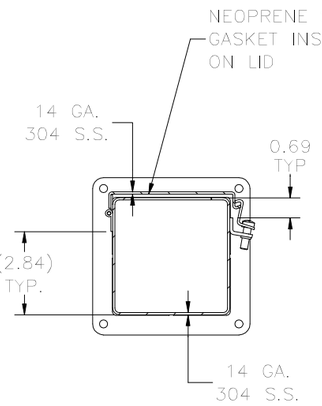

TOP VIEW

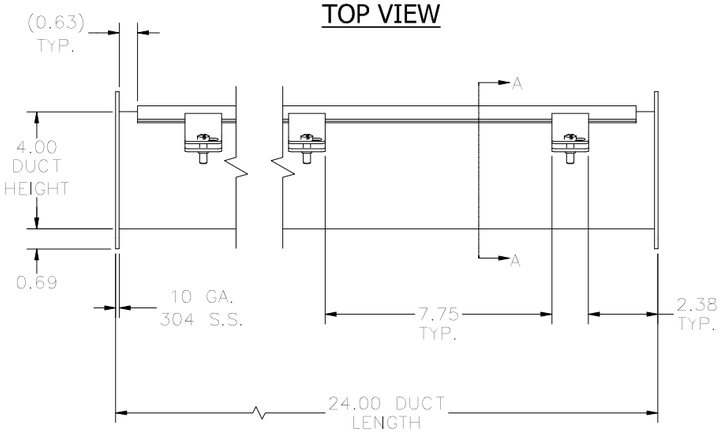

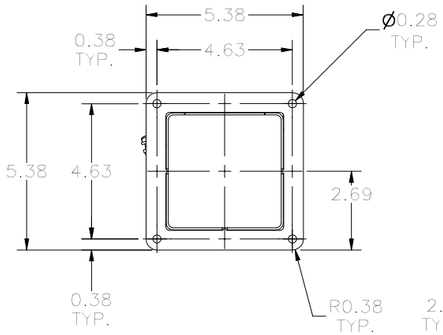

TOP VIEW (LID ASSM. NOT SHOWN)

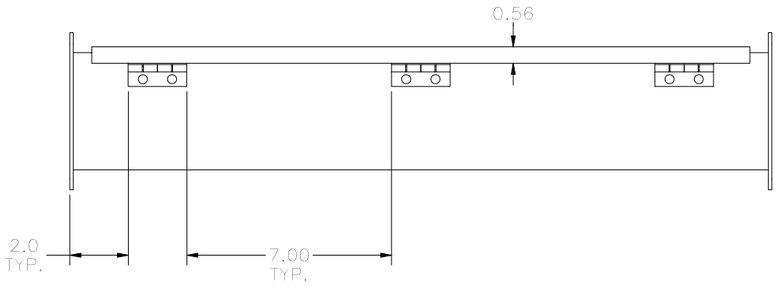

SECTION A-A VIEW

FRONT VIEW

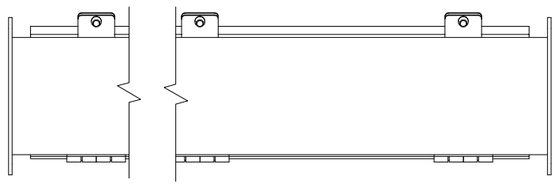

RIGHT SIDE VIEW

REAR VIEW

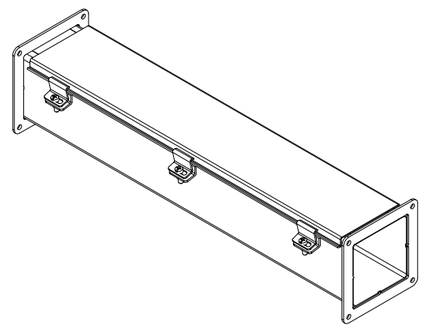

BOTTOM VIEW

PART#: SSJW42
(DATA SUBJECT TO CHANGE WITHOUT NOTICE)

THIS DRAWING IS PROPERTY OF hUBBELL INC. WEIGMANN
ALL INFORMATION IS PROPRIETARY AND NOT TO BE DUPLICATED