

TOP VIEW

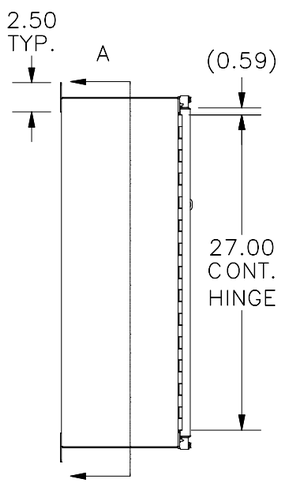

LEFT SIDE

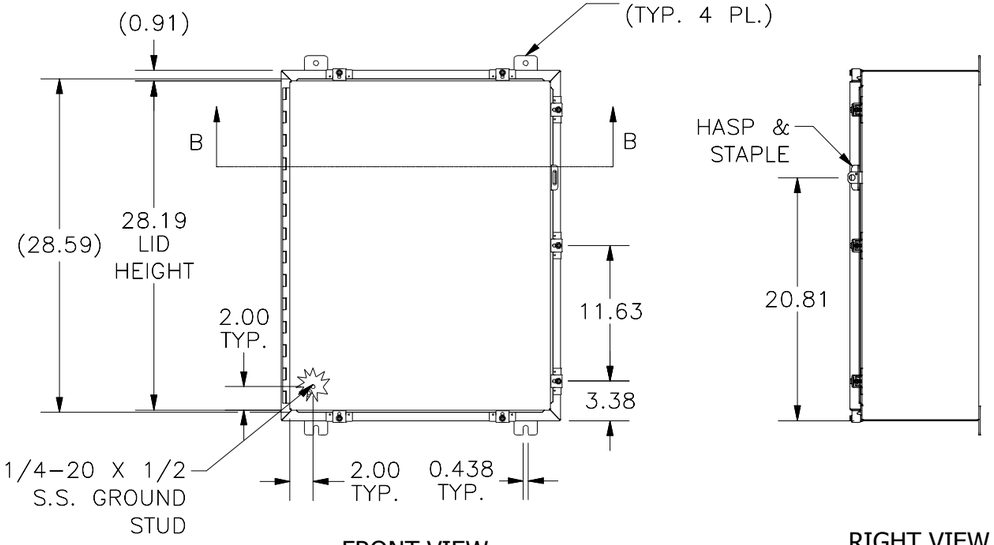

FRONT VIEW

RIGHT VIEW

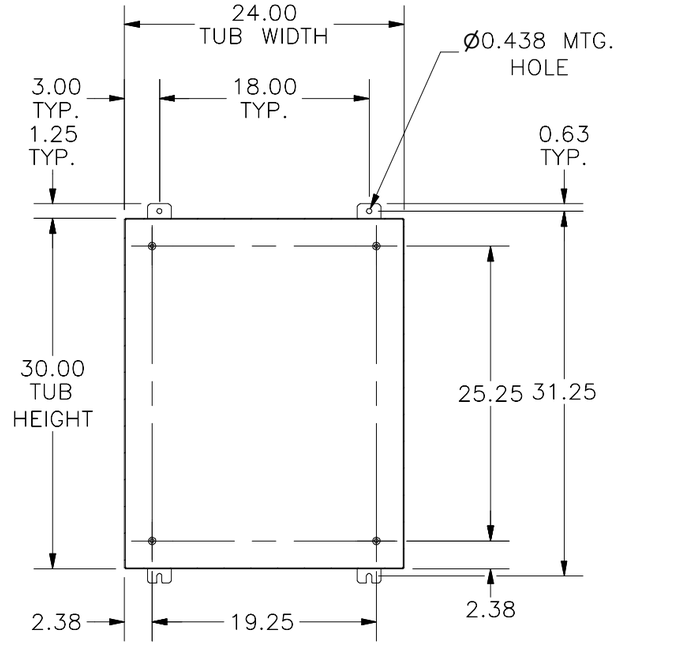

SECTION A-A

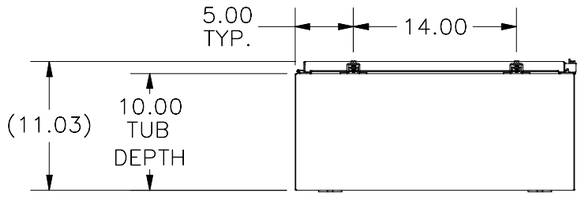

BOTTOM VIEW

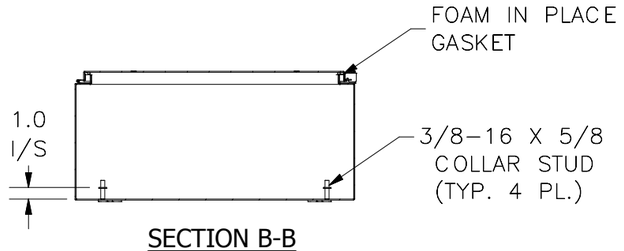

SECTION B-B

PART#: HWDSSN4302410
(DATA SUBJECT TO CHANGE WITHOUT NOTICE)

THIS DRAWING IS PROPERTY OF HUBBELL INC. WIEGMANN
ALL INFORMATION IS PROPRIETARY AND NOT TO BE DUPLICATED