

TOP VIEW

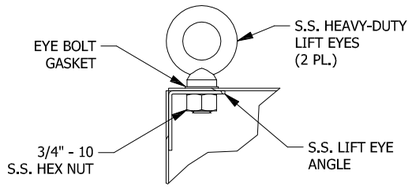

DETAIL AD
(LIFT EYE ASSEMBLY VIEW)

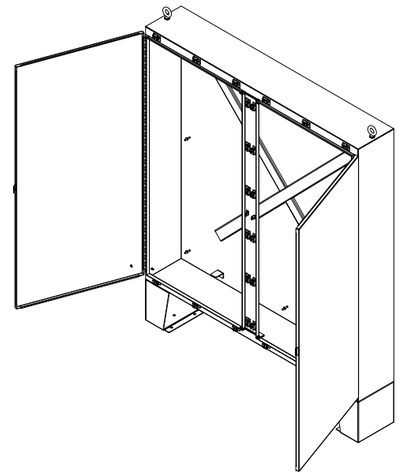

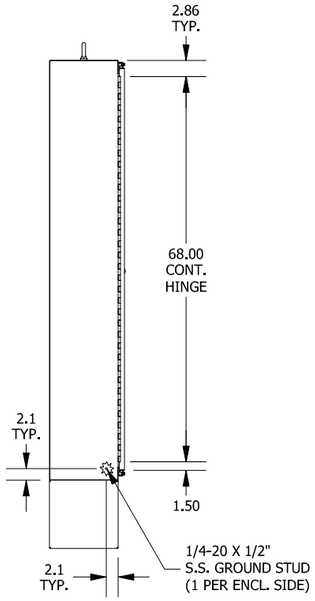

LEFT SIDE VIEW

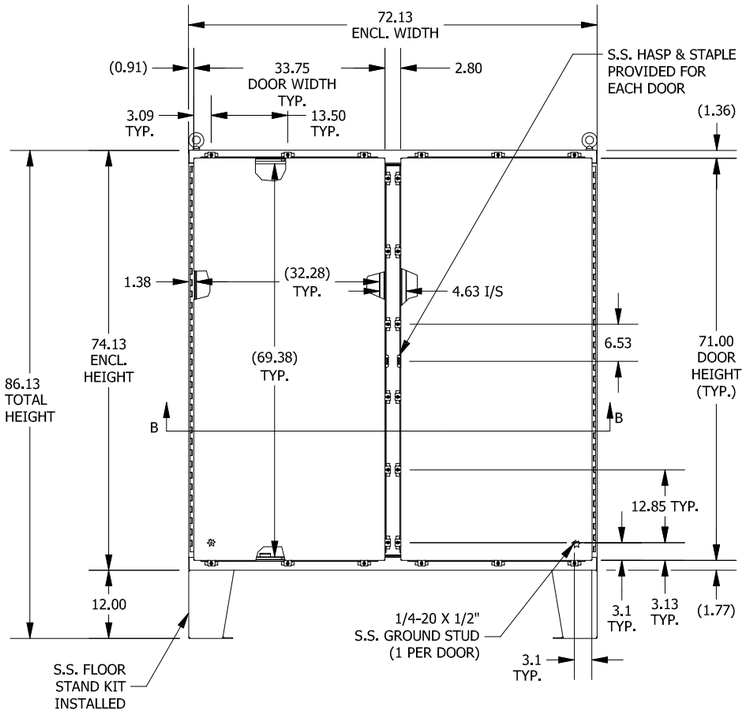

FRONT VIEW

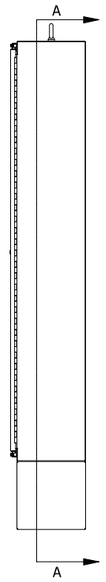

RIGHT SIDE VIEW

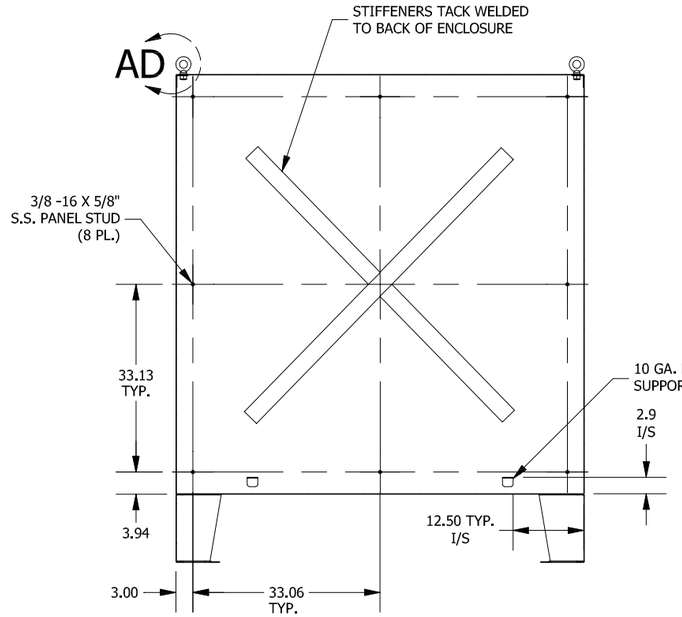

SECTION A-A
(INSIDE BACK VIEW OF ENCLOSURE)

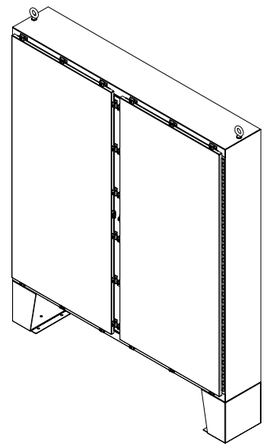

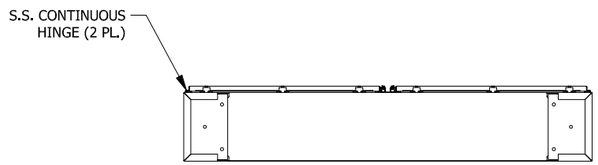

BOTTOM VIEW

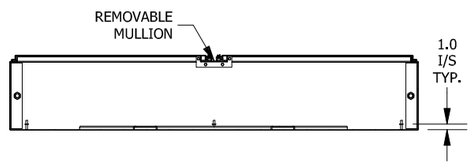

SECTION B-B
(INSIDE VIEW OF TOP)

PART#: SSN4D747212
(DATA SUBJECT TO CHANGE WITHOUT NOTICE)

THIS DRAWING IS PROPERTY OF HUBBELL INC. WIEGMANN
ALL INFORMATION IS PROPRIETARY AND NOT TO BE DUPLICATED