

TOP VIEW

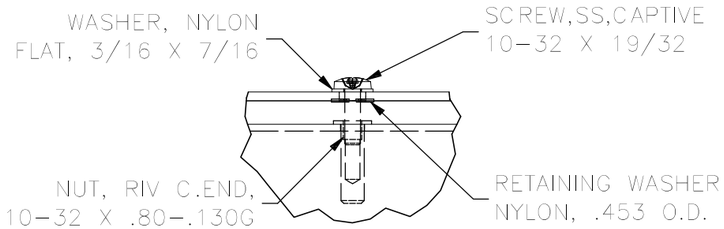

DETAIL D
(10 PL.)

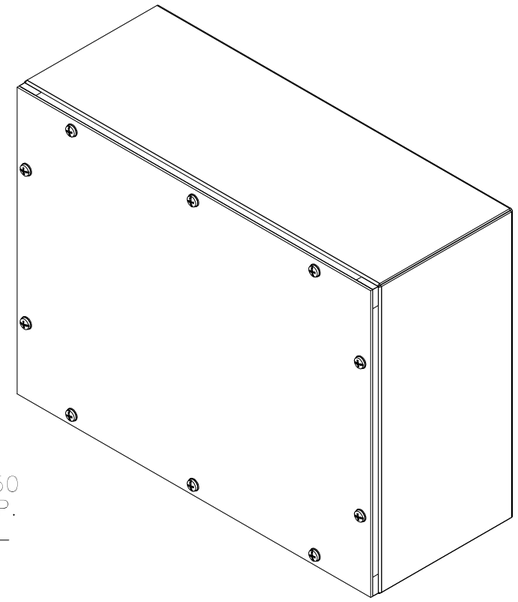

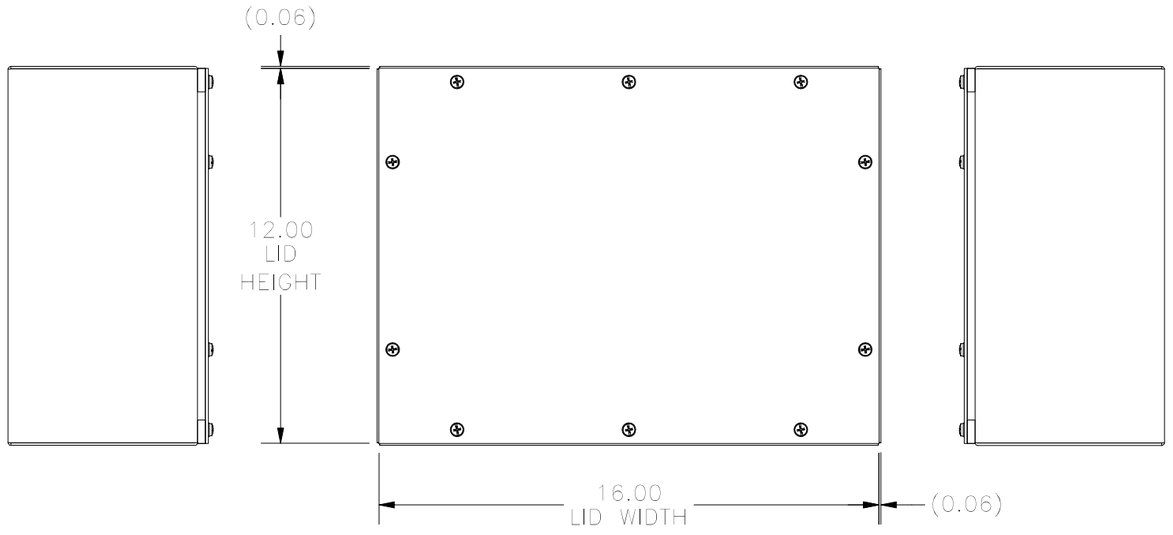

RIGHT SIDE VIEW

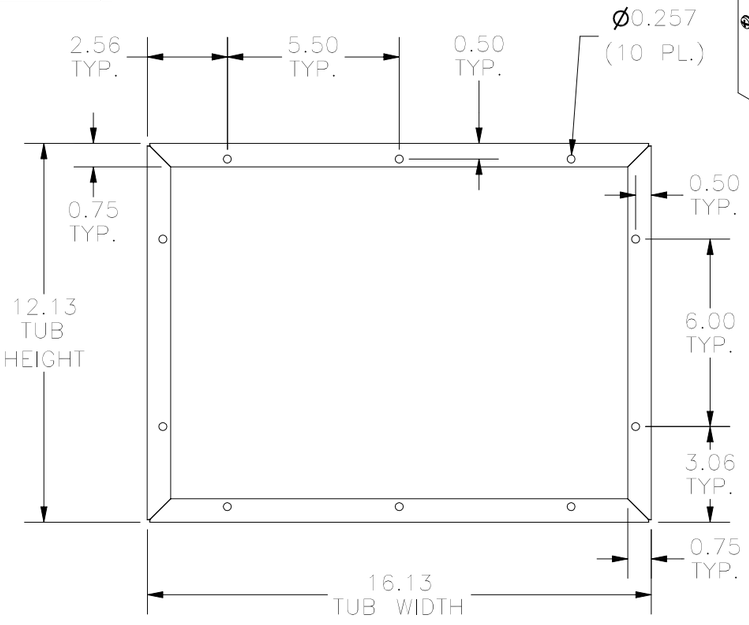

FRONT VIEW TUB

LEFT SIDE VIEW

FRONT VIEW

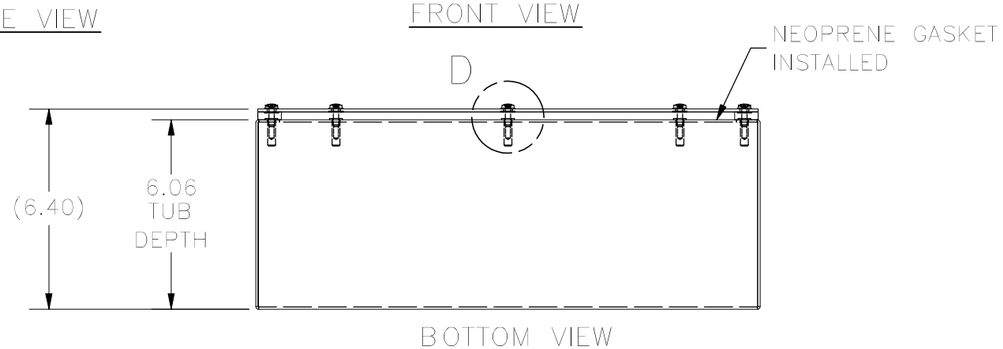

BOTTOM VIEW

PART#: WA121606GSCG
(DATA SUBJECT TO CHANGE WITHOUT NOTICE)

THIS DRAWING IS PROPERTY OF HUBBELL INC. WIEGMANN
ALL INFORMATION IS PROPRIETARY AND NOT TO BE DUPLICATED