

TOP VIEW

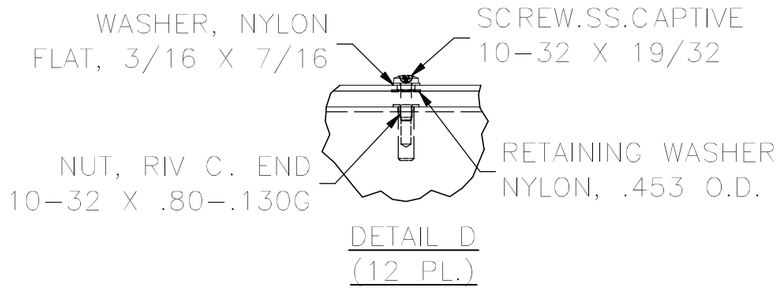


DETAIL D
(12 PL.)

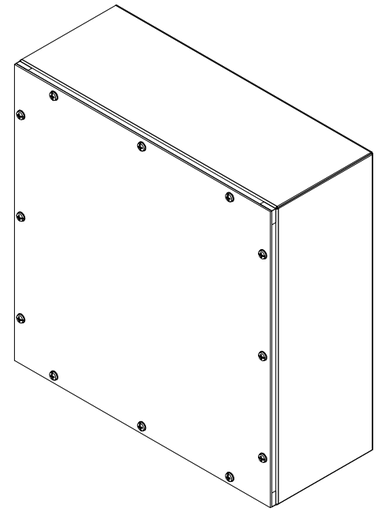

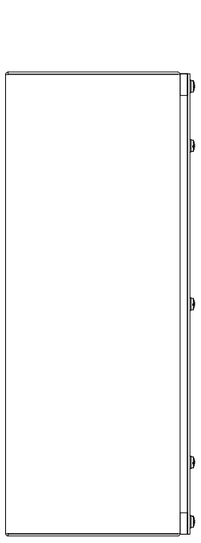

LEFT SIDE VIEW

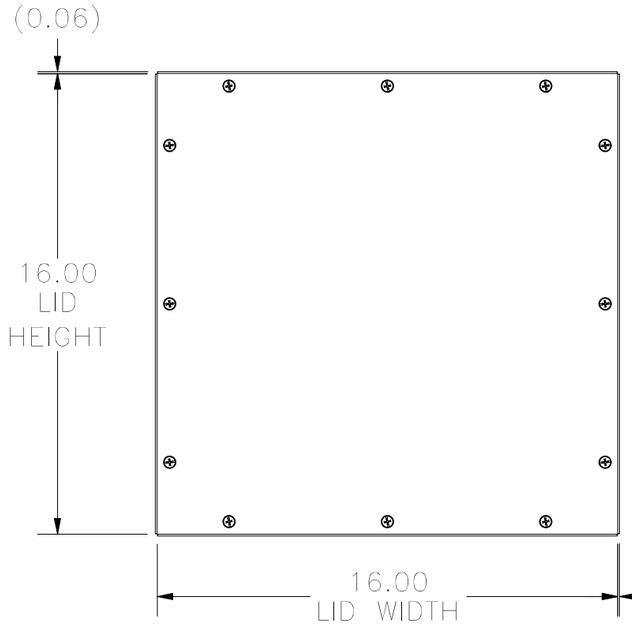


FRONT VIEW

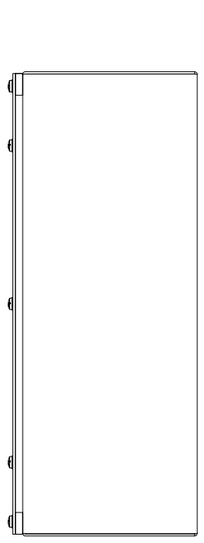

RIGHT SIDE VIEW

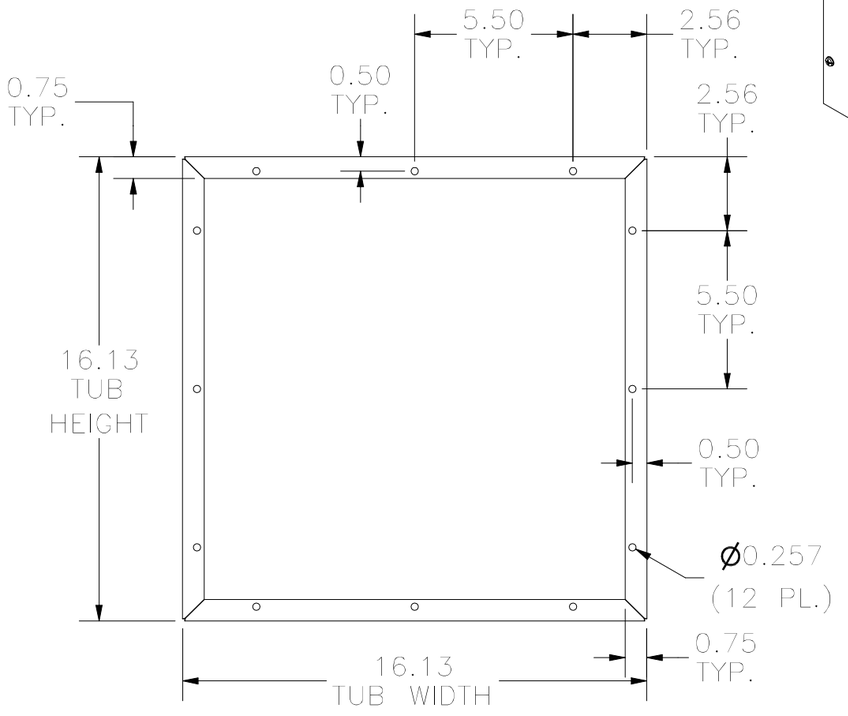


FRONT VIEW TUB

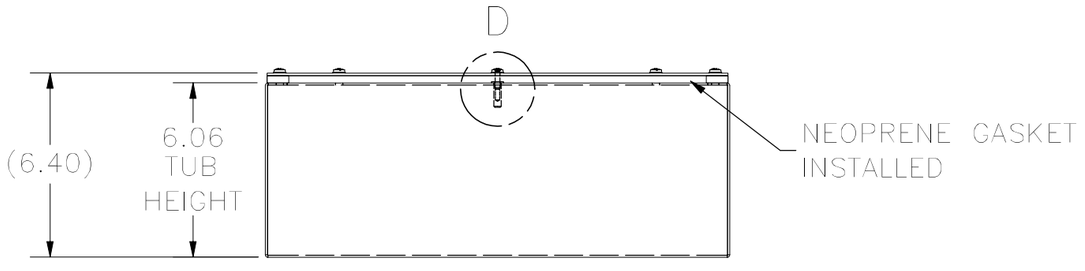


BOTTOM VIEW

PART#: WA161606GSCG
(DATA SUBJECT TO CHANGE WITHOUT NOTICE)

THIS DRAWING IS PROPERTY OF HUBBELL INC. WIEGMANN
ALL INFORMATION IS PROPRIETARY AND NOT TO BE DUPLICATED