

TOP VIEW

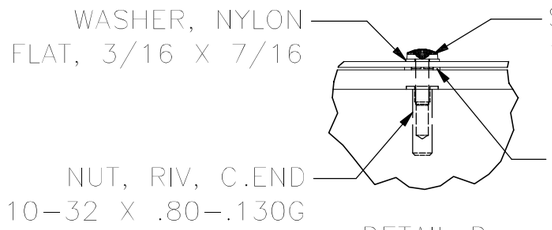

DETAIL D
(16 PL.)

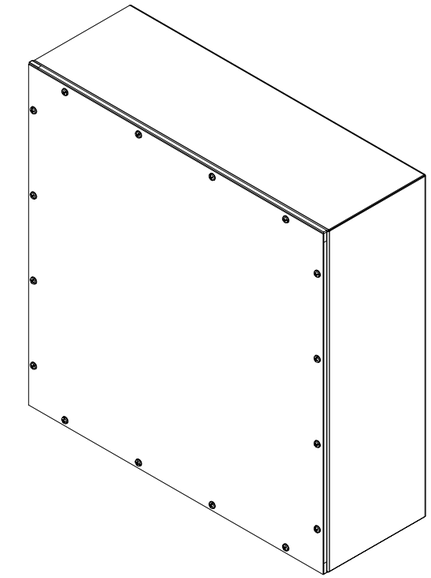

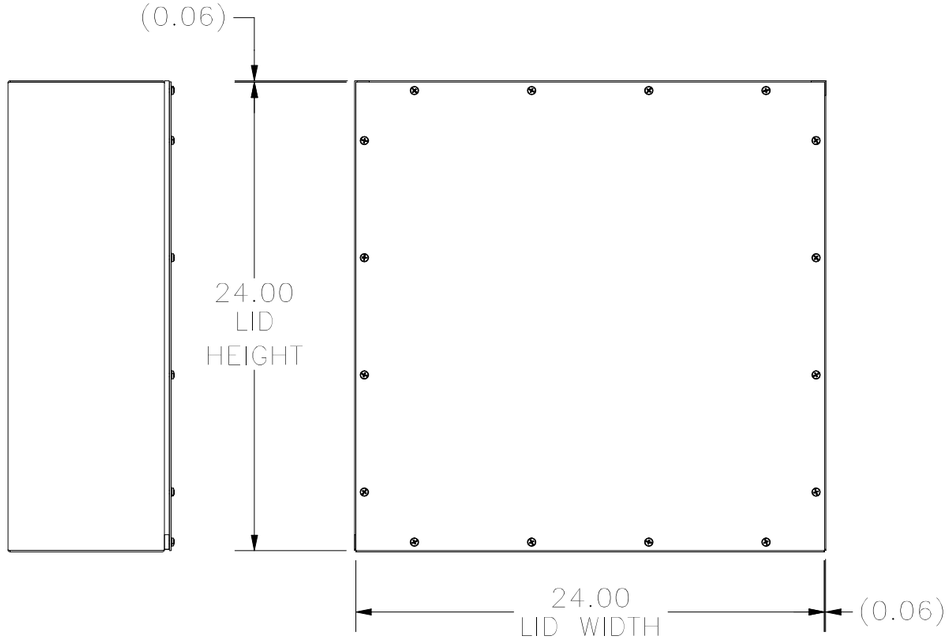

LEFT SIDE VIEW

FRONT VIEW

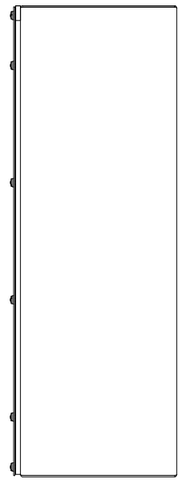

RIGHT SIDE VIEW

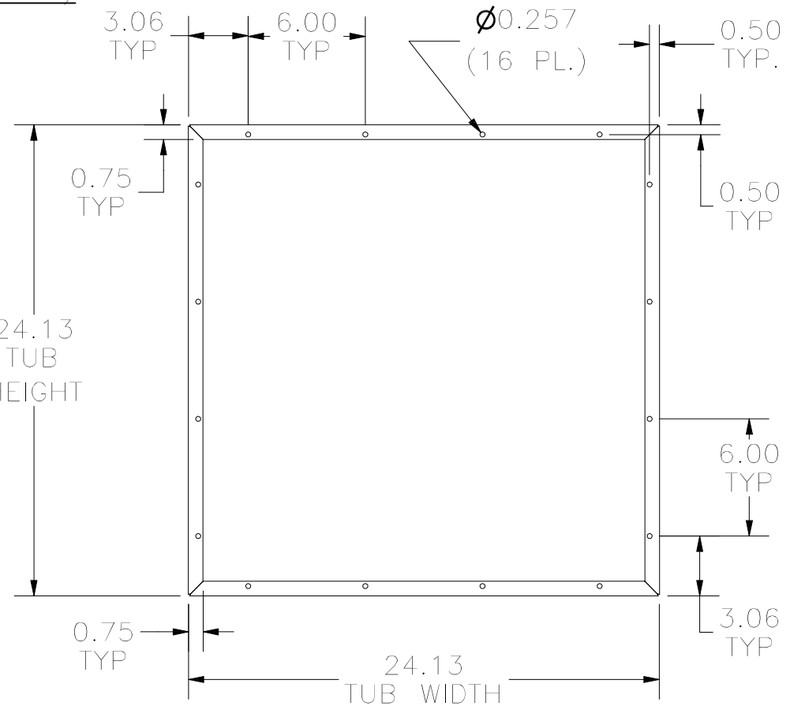

FRONT VIEW OF TUB

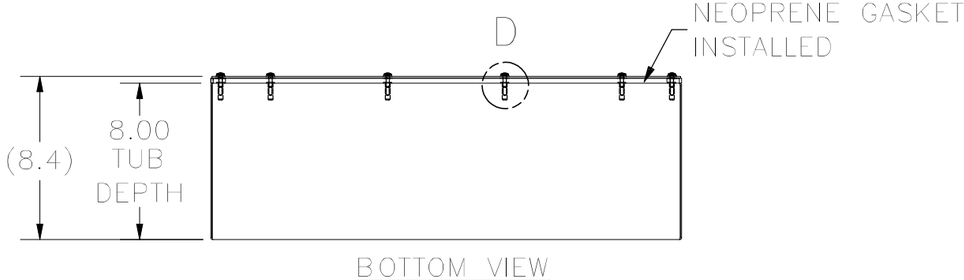

BOTTOM VIEW

PART#: WA242408GSC

(DATA SUBJECT TO CHANGE WITHOUT NOTICE)

THIS DRAWING IS PROPERTY OF HUBBELL INC. WIEGMANN
ALL INFORMATION IS PROPRIETARY AND NOT TO BE DUPLICATED