


TOP VIEW

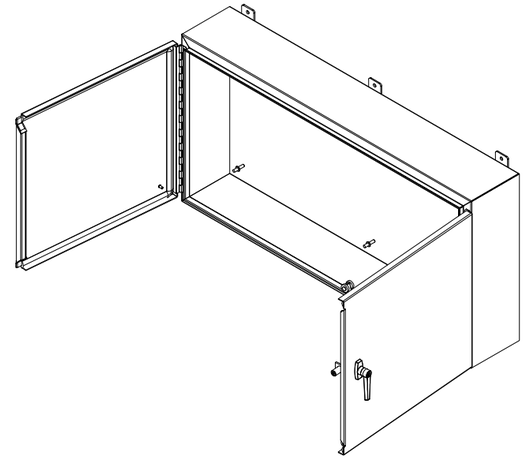

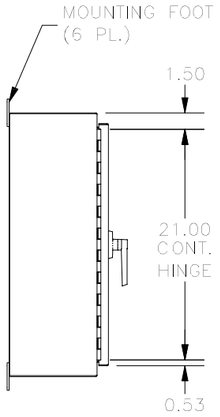


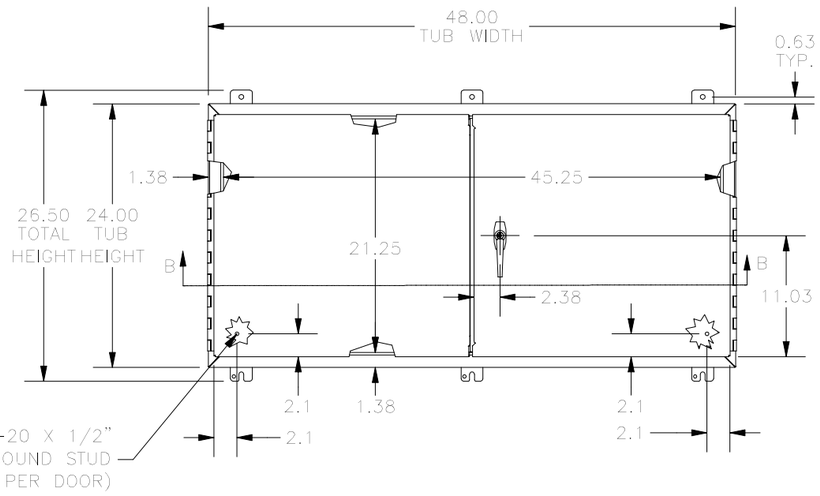


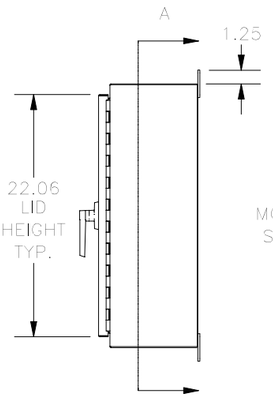


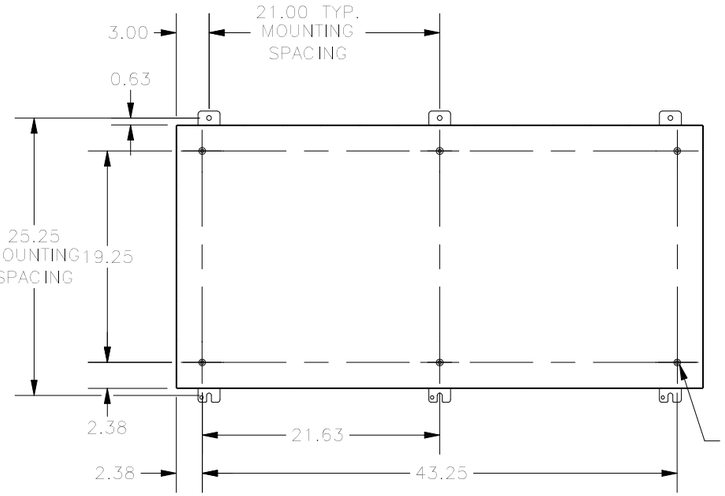


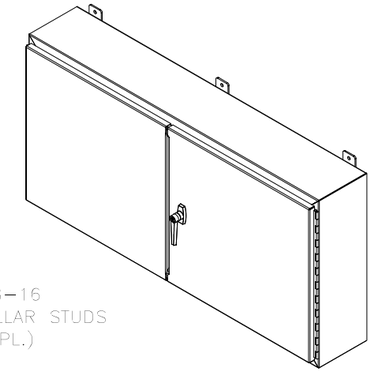

LEFT SIDE VIEW

FRONT VIEW

RIGHT SIDE VIEW

SECTION A-A
(INSIDE BACK VIEW OF ENCL.)

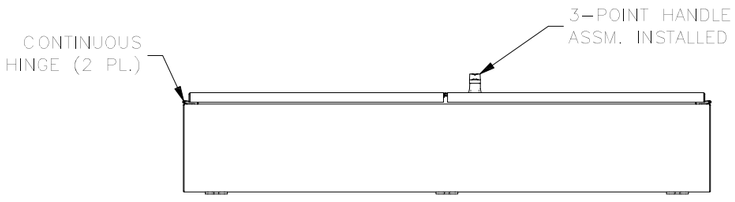


BOTTOM VIEW

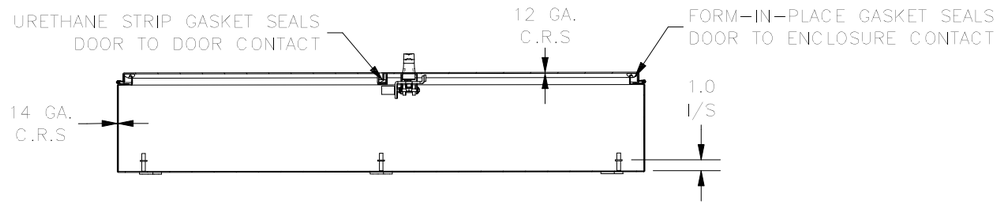


SECTION B-B
(INSIDE VIEW OF TOP)

PART#: WA244808WF
(DATA SUBJECT TO CHANGE WITHOUT NOTICE)

THIS DRAWING IS PROPERTY OF HUBBELL INC. WIEGMANN
ALL INFORMATION IS PROPRIETARY AND NOT TO BE DUPLICATED