

TOP VIEW

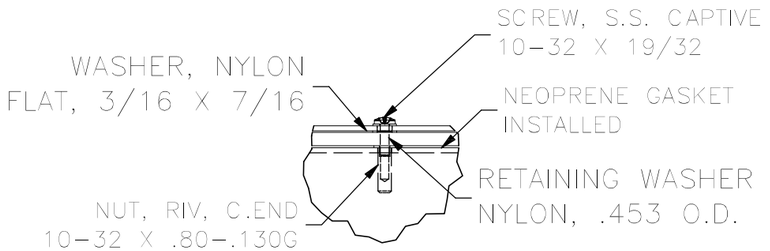

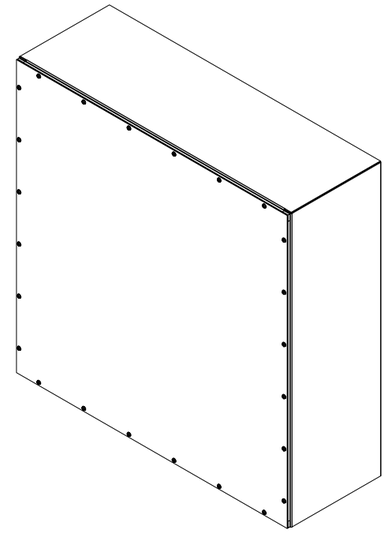

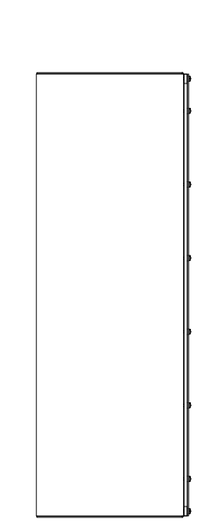

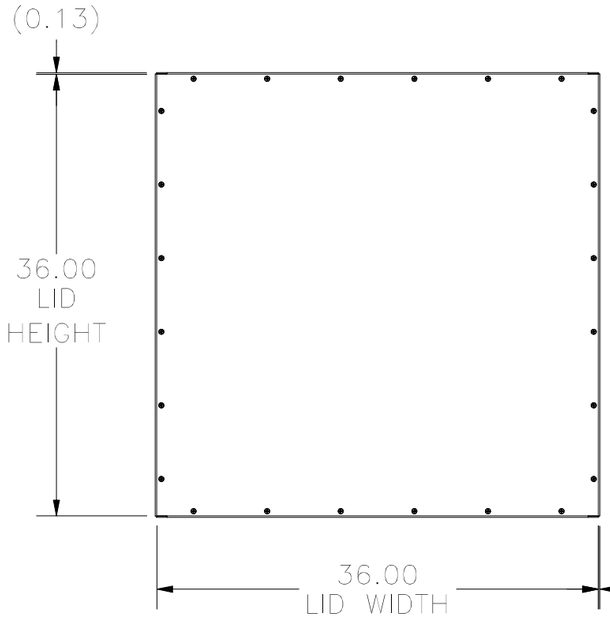

LEFT SIDE VIEW

FRONT VIEW

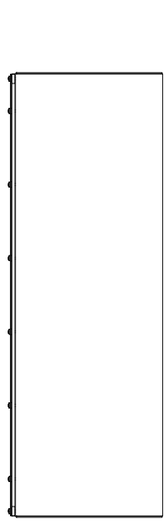

RIGHT SIDE VIEW

DETAIL D
(24 PL.)

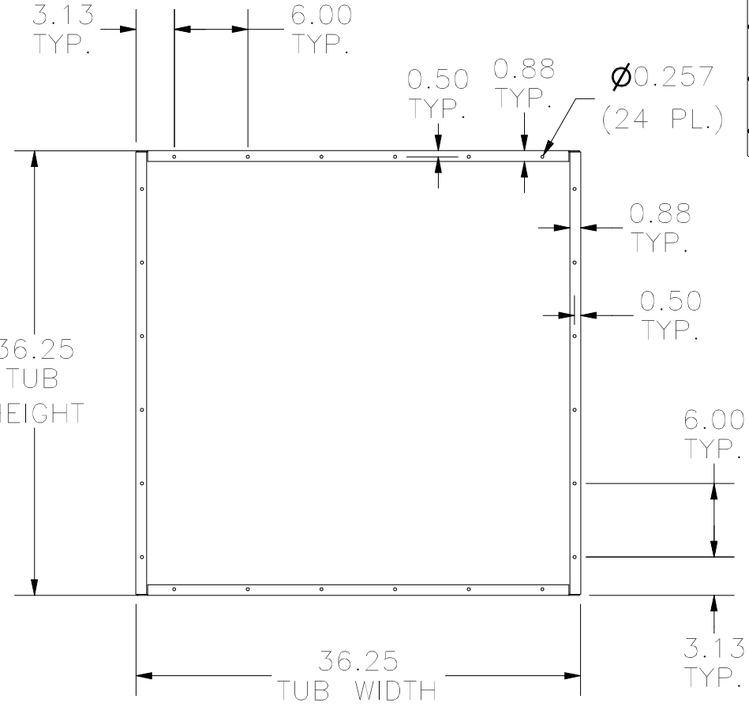

FRONT VIEW TUB

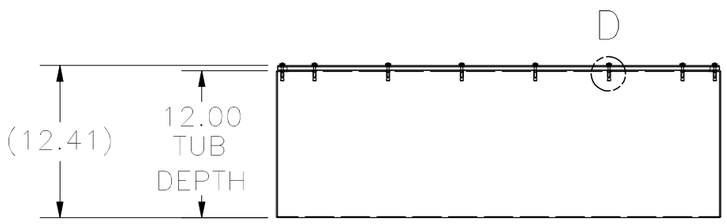

BOTTOM VIEW

PART#: WA363612GSCG
(DATA SUBJECT TO CHANGE WITHOUT NOTICE)

THIS DRAWING IS PROPERTY OF HUBBELL INC. WIEGMANN
ALL INFORMATION IS PROPRIETARY AND NOT TO BE DUPLICATED