

TOP VIEW

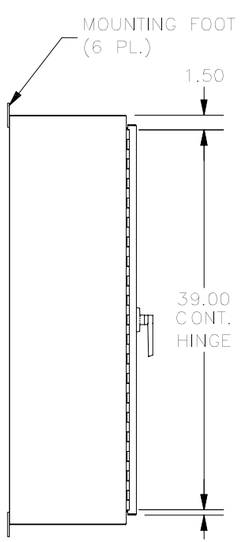

LEFT SIDE VIEW

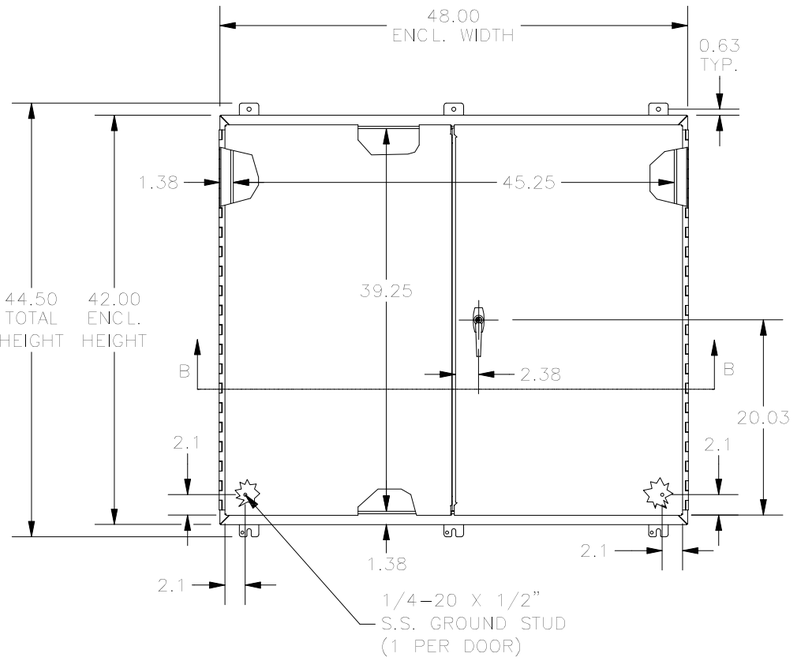

FRONT VIEW

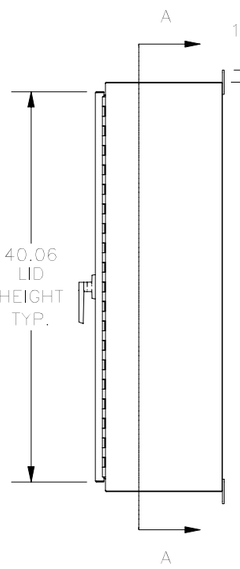

RIGHT SIDE VIEW

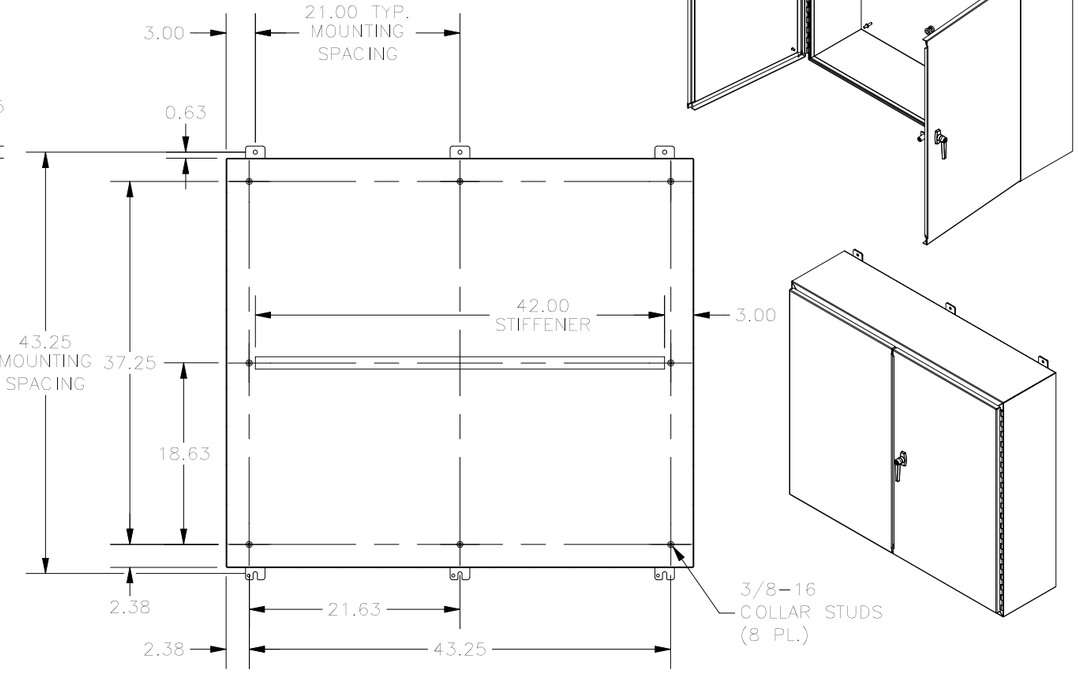

SECTION A-A
(INSIDE BACK VIEW OF ENCL.)

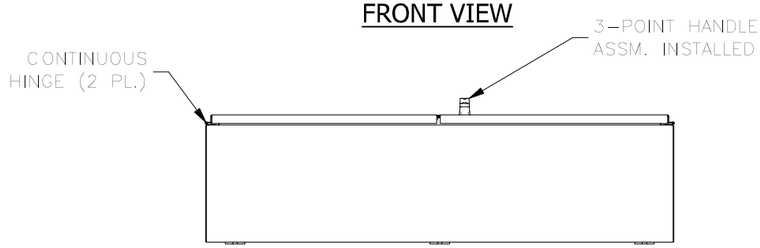

BOTTOM VIEW

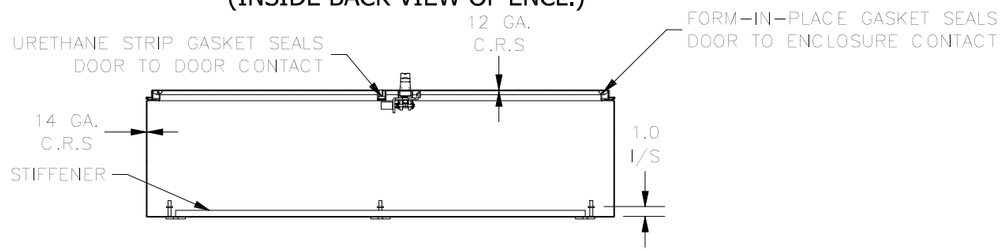

SECTION B-B
(INSIDE VIEW OF TOP)

PART#: WA426012WF
(DATA SUBJECT TO CHANGE WITHOUT NOTICE)

THIS DRAWING IS PROPERTY OF HUBBELL INC. WIEGMANN
ALL INFORMATION IS PROPRIETARY AND NOT TO BE DUPLICATED