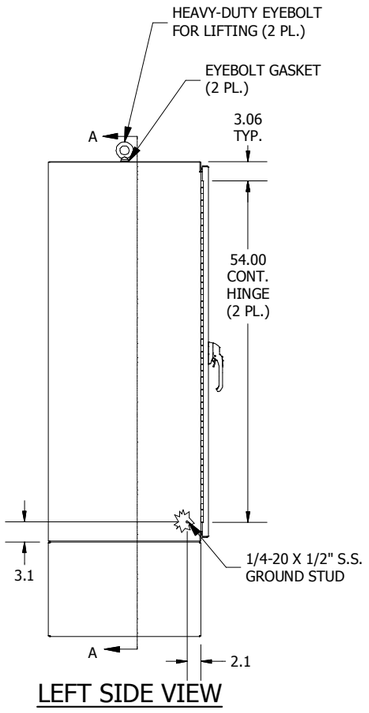

LEFT SIDE VIEW

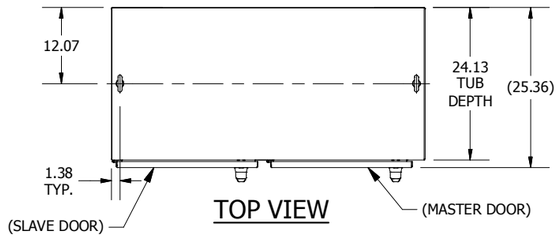

TOP VIEW

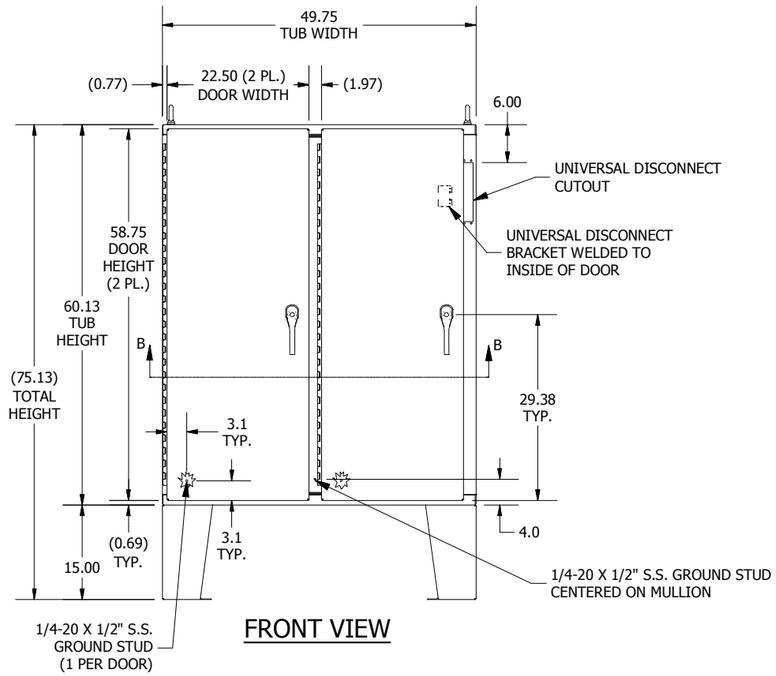

FRONT VIEW

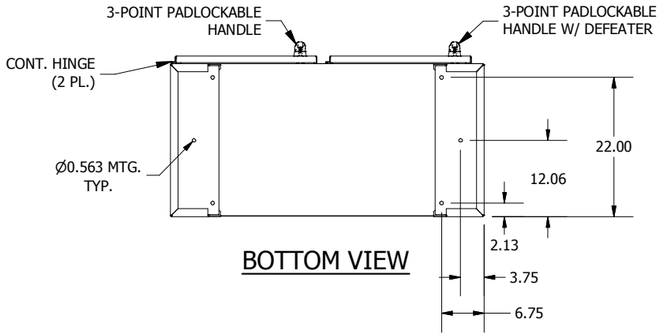

BOTTOM VIEW

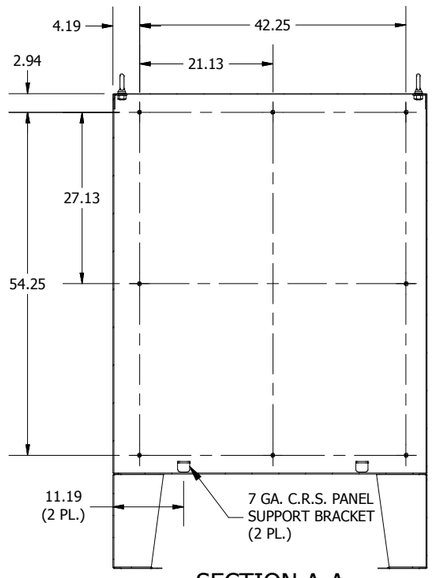

SECTION A-A
(INSIDE BACK OF ENCL.)

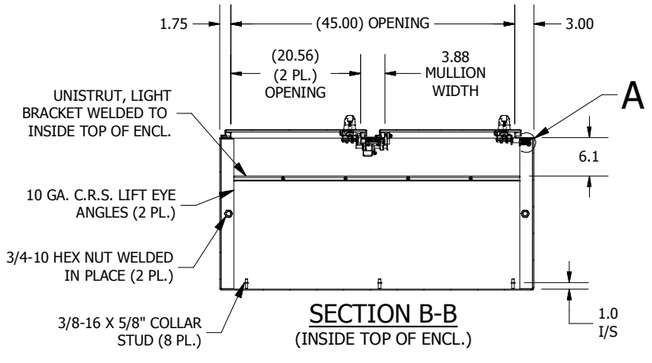

SECTION B-B
(INSIDE TOP OF ENCL.)

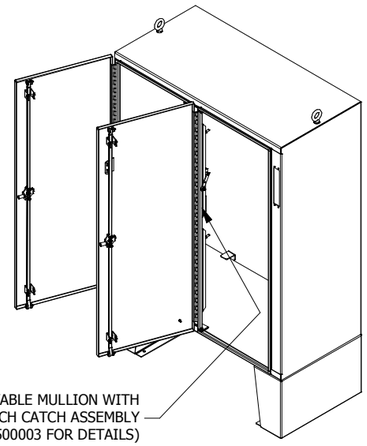

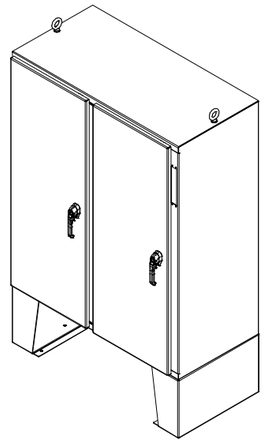

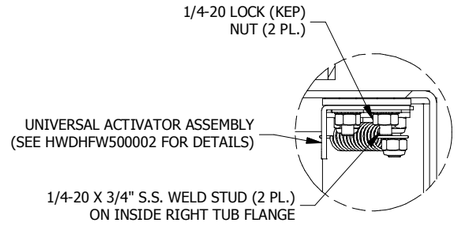

DETAIL A
(UNIV. ACTIVATOR INSTALL)

PART#: WA60X4924U
(DATA SUBJECT TO CHANGE WITHOUT NOTICE)

THIS DRAWING IS PROPERTY OF HUBBELL INC. WIEGMANN
ALL INFORMATION IS PROPRIETARY AND NOT TO BE DUPLICATED