

TOP VIEW

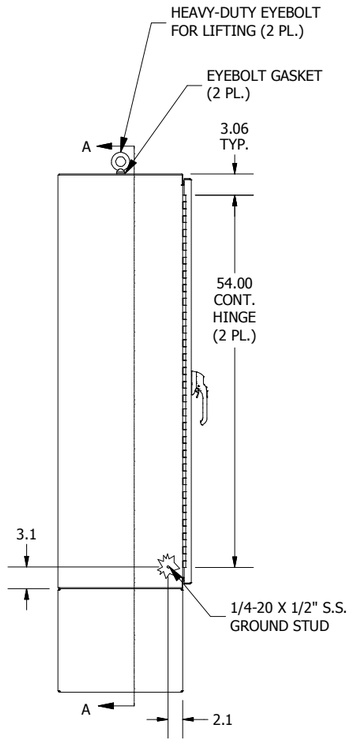

LEFT SIDE VIEW

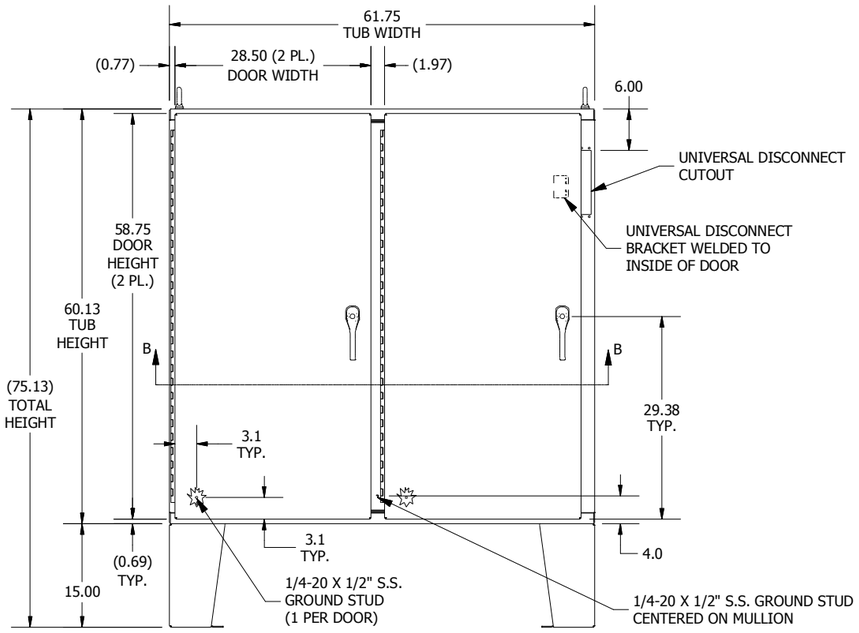

FRONT VIEW

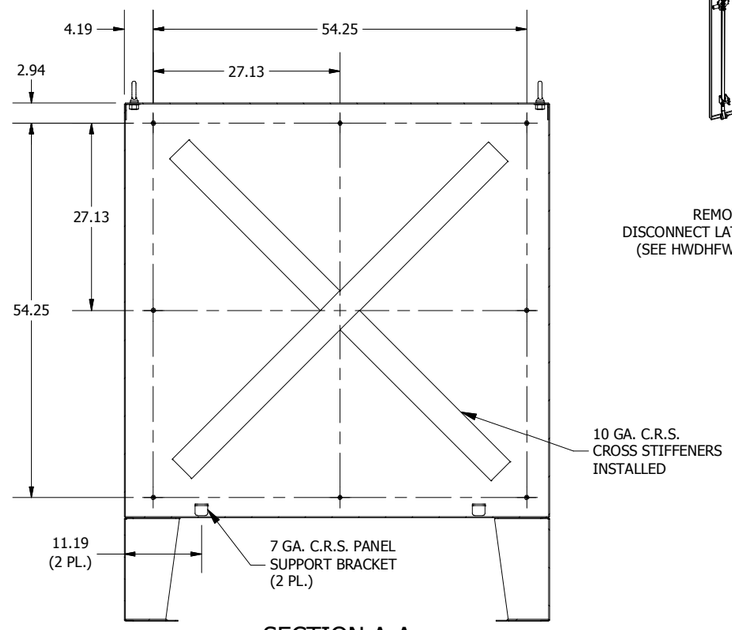

SECTION A-A
(INSIDE BACK OF ENCL.)

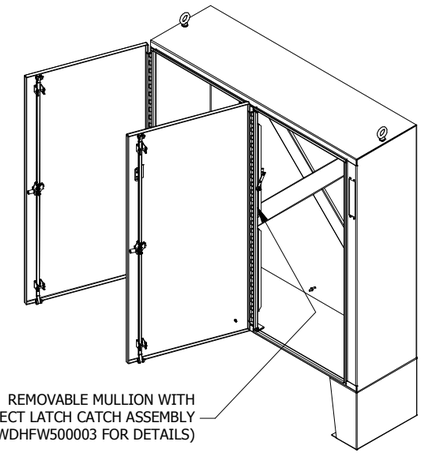

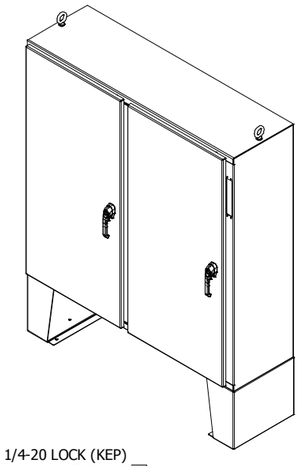

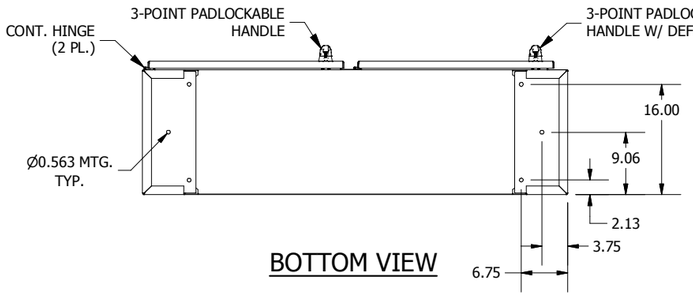

BOTTOM VIEW

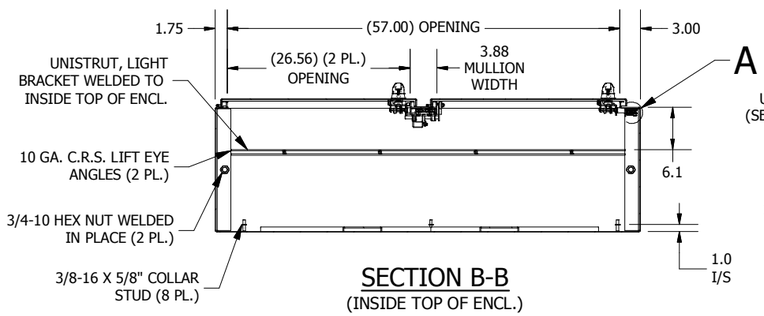

SECTION B-B
(INSIDE TOP OF ENCL.)

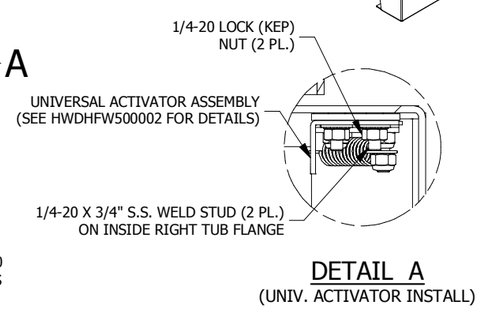

DETAIL A
(UNIV. ACTIVATOR INSTALL)

PART#: WA60X6118U
(DATA SUBJECT TO CHANGE WITHOUT NOTICE)

THIS DRAWING IS PROPERTY OF HUBBELL INC. WIEGMANN
ALL INFORMATION IS PROPRIETARY AND NOT TO BE DUPLICATED