PART#: WA722418FS
(DATA SUBJECT TO CHANGE WITHOUT NOTICE)

THIS DRAWING IS PROPERTY OF HUBBELL INC. WIEGMANN ALL INFORMATION IS PROPRIETARTY AND NOT TO BE DUPLICATED

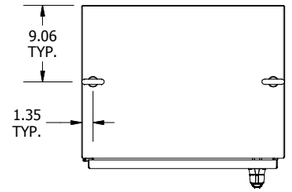

TOP VIEW

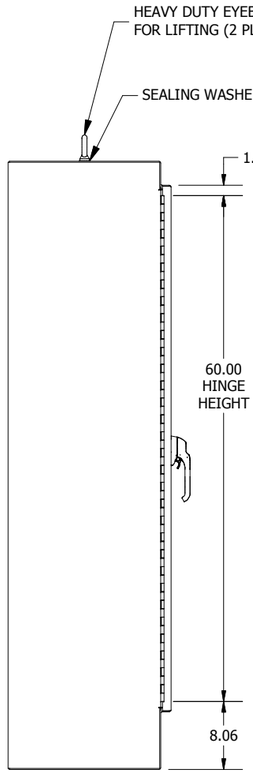

LEFT SIDE VIEW

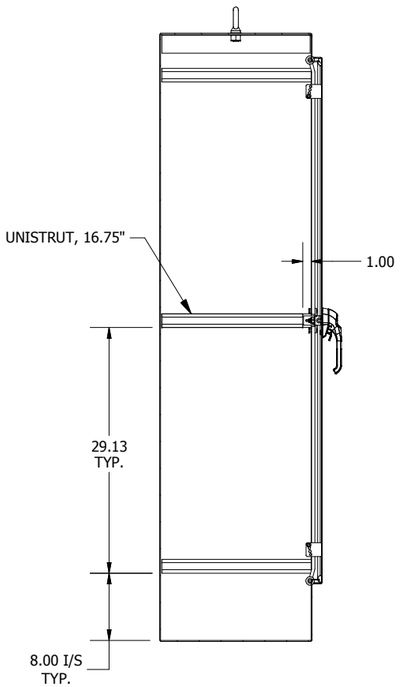

SECTION A-A
(INSIDE RIGHT OF ENCL.)

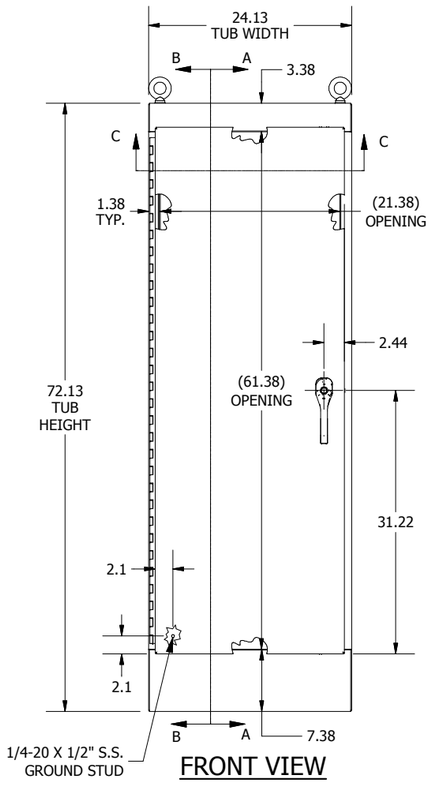

FRONT VIEW

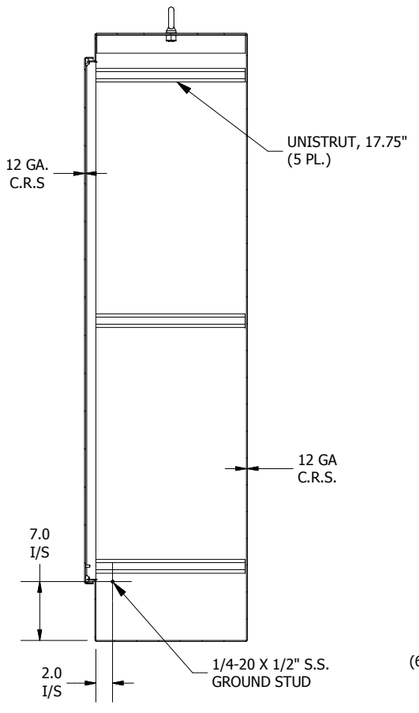

SECTION B-B
(INSIDE LEFT OF ENCL.)

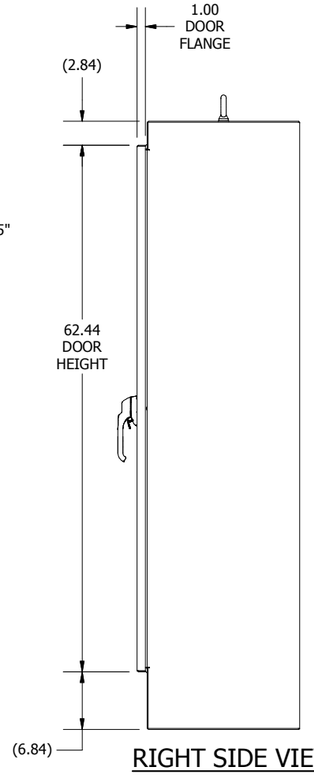

RIGHT SIDE VIEW

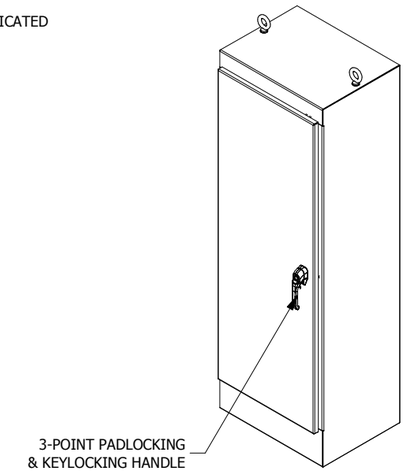

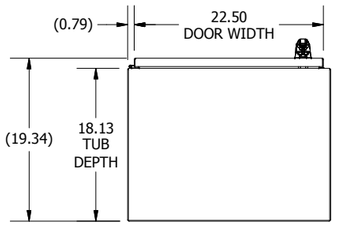

BOTTOM VIEW

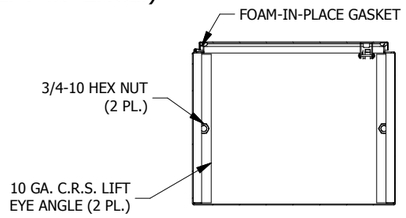

SECTION C-C
(INSIDE TOP OF ENCL.)

