

DETAIL A (2 PL.)
(LIFT-EYE DETAIL)

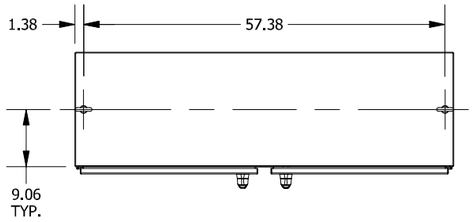

TOP VIEW

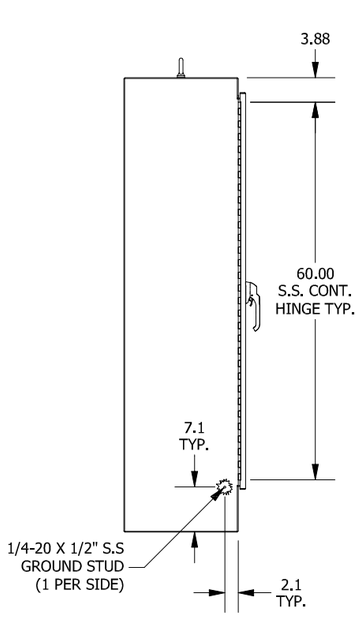

LEFT SIDE VIEW

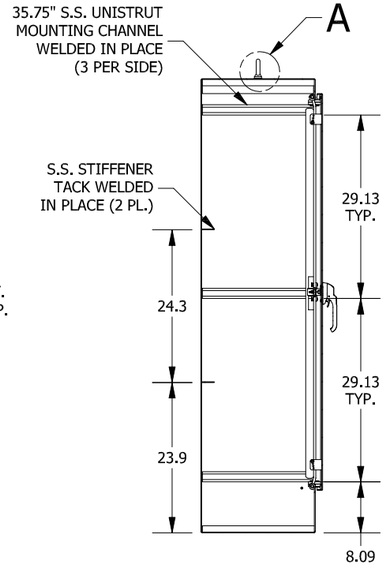

SECTION A-A
(INSIDE RIGHT VIEW OF ENCL.)

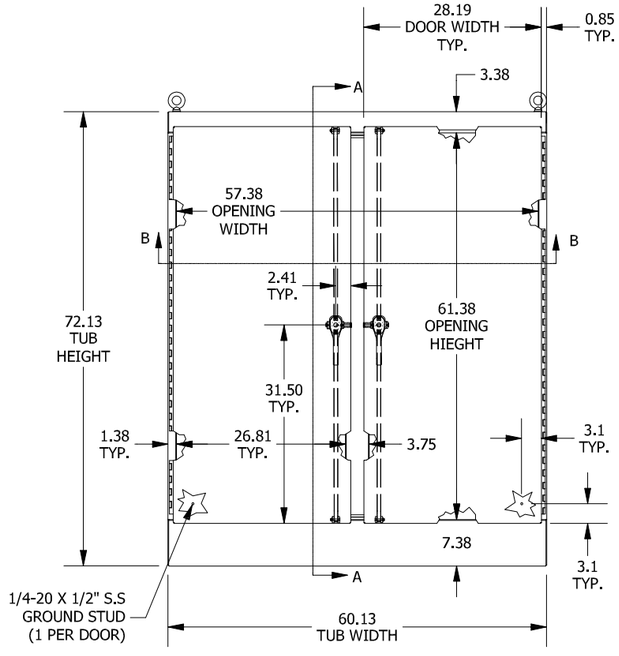

FRONT VIEW

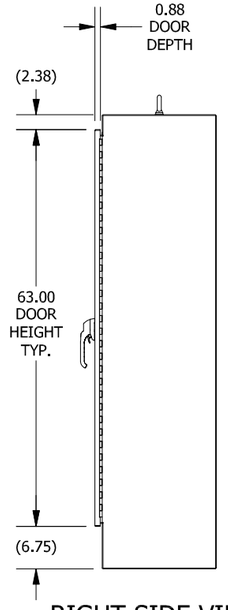

RIGHT SIDE VIEW

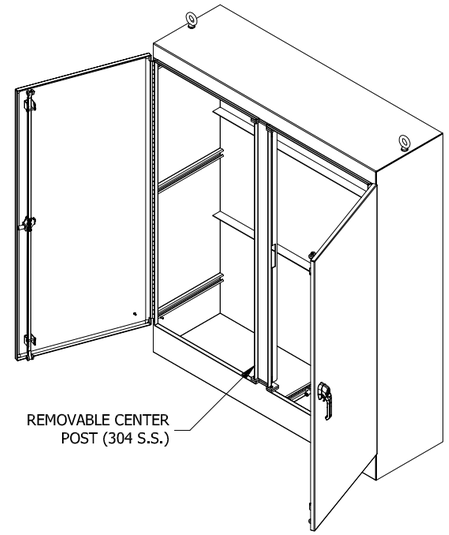

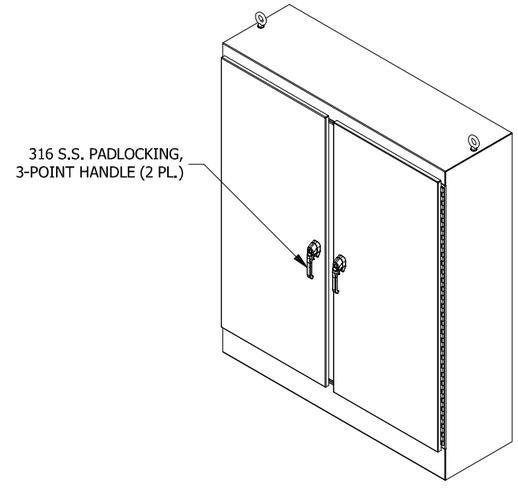

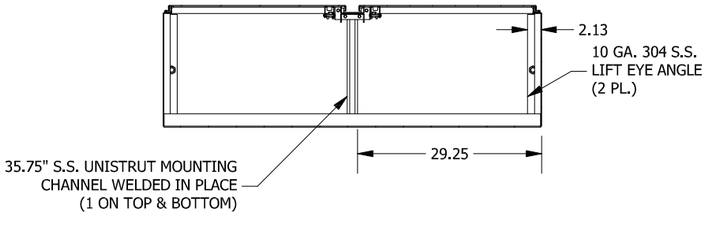

SECTION B-B
(INSIDE TOP OF ENCL.)

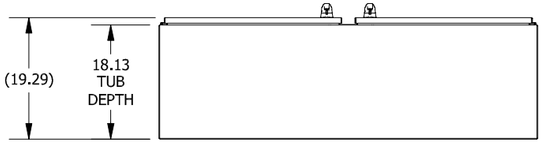

BOTTOM VIEW

PART#: WA726018SSFSDN43PT
(DATA SUBJECT TO CHANGE WITHOUT NOTICE)

THIS DRAWING IS PROPERTY OF HUBBELL INC. WIEGMANN
ALL INFORMATION IS PROPRIETARY AND NOT TO BE DUPLICATED