


LEFT SIDE VIEW

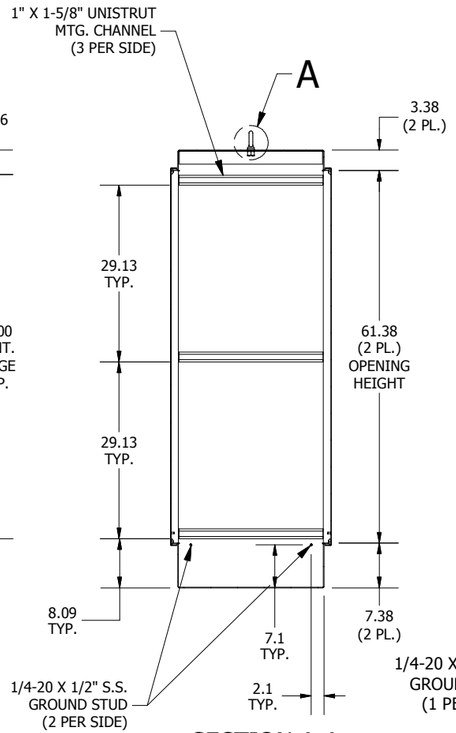


SECTION A-A
(INSIDE RIGHT OF ENCL.)

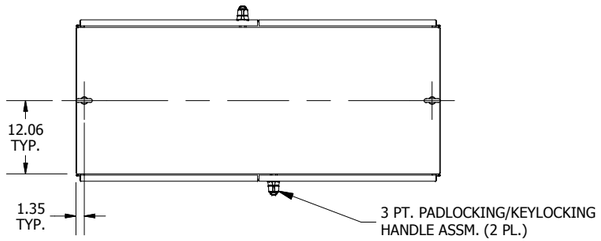


TOP VIEW

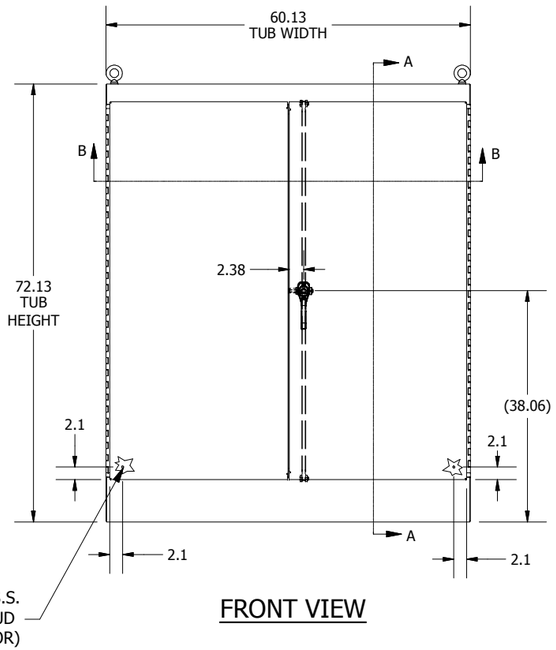


FRONT VIEW

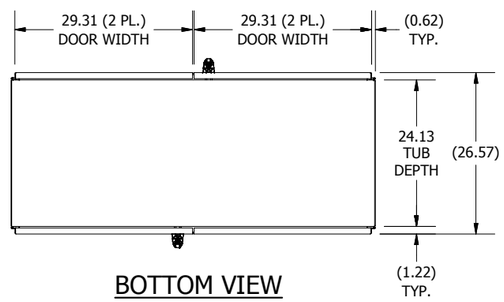


BOTTOM VIEW

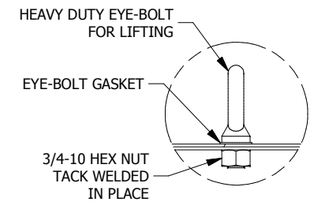


DETAIL A (2 PL.)
(LIFT-EYE DETAIL)

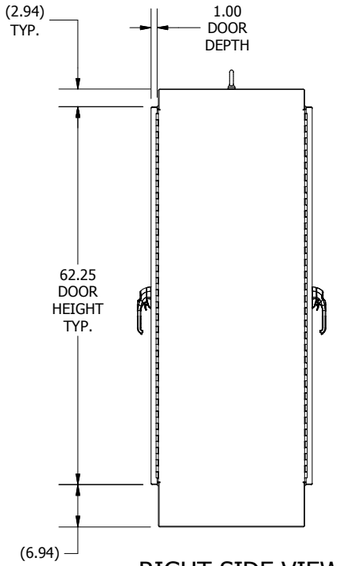


RIGHT SIDE VIEW

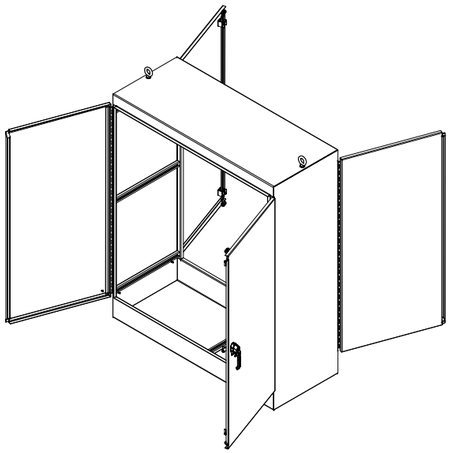

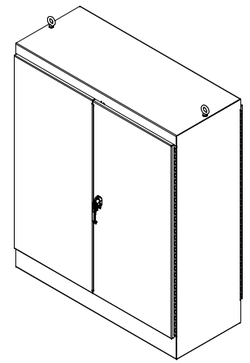

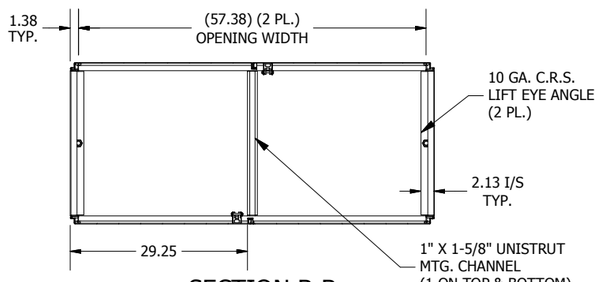


SECTION B-B
(INSIDE TOP OF ENCL.)

PART#: WA726024FSDAD
(DATA SUBJECT TO CHANGE WITHOUT NOTICE)

THIS DRAWING IS PROPERTY OF HUBBELL INC. WIEGMANN ALL INFORMATION IS PROPRIETARTY AND NOT TO BE DUPLICATED