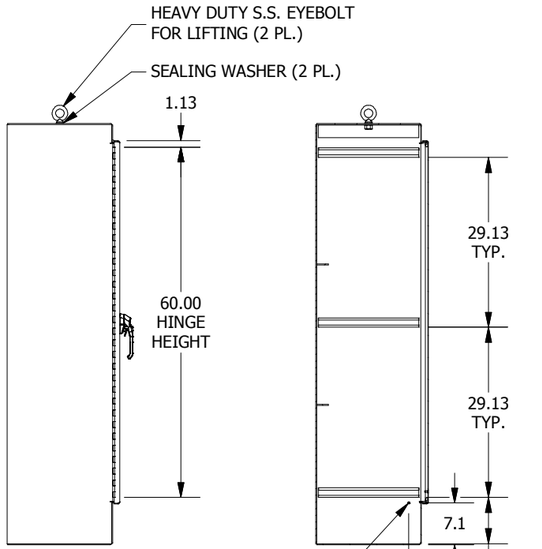

LEFT SIDE VIEW

SECTION B-B
(INSIDE RIGHT OF ENCL.)

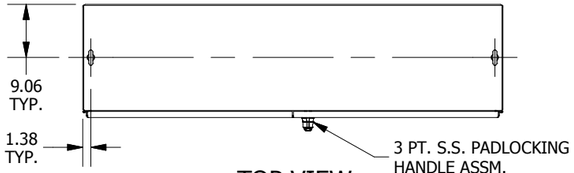

TOP VIEW

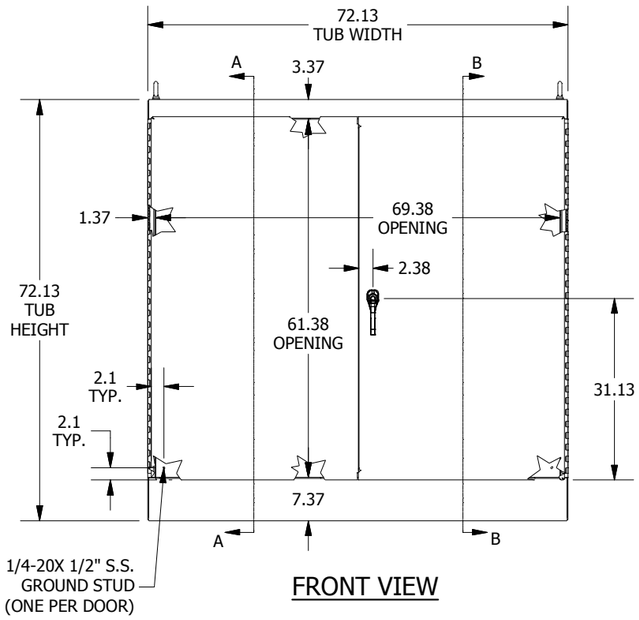

FRONT VIEW

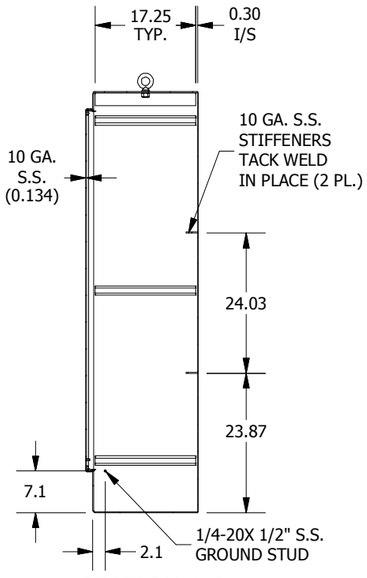

SECTION A-A
(INSIDE LEFT OF ENCL.)

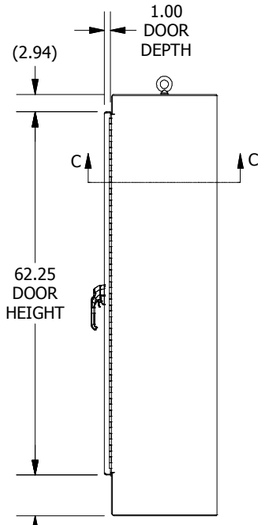

RIGHT SIDE VIEW

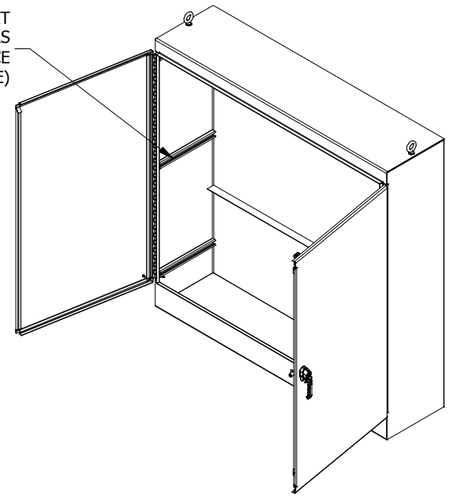

BOTTOM VIEW

SECTION C-C

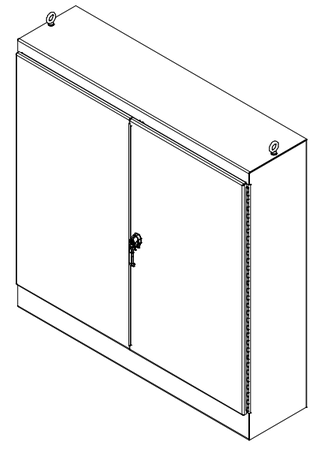

PART#: WA727218FSDSS

(DATA SUBJECT TO CHANGE WITHOUT NOTICE)

THIS DRAWING IS PROPERTY OF HUBBELL INC. WIEGMANN
ALL INFORMATION IS PROPRIETARY AND NOT TO BE DUPLICATED