

LEFT SIDE VIEW

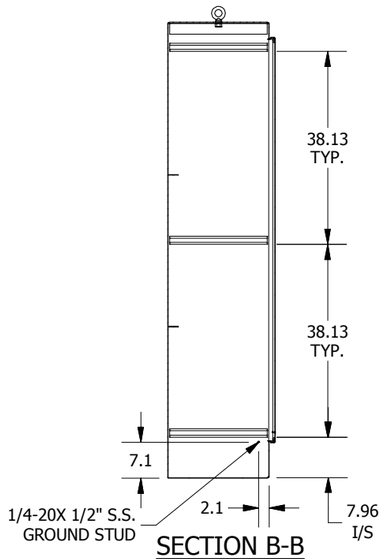

SECTION B-B
(INSIDE RIGHT OF ENCL.)

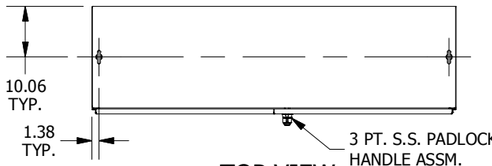

TOP VIEW

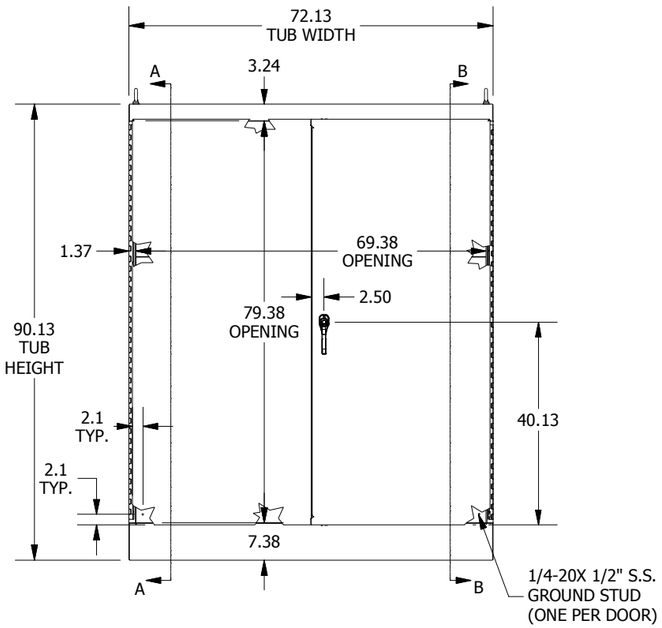

FRONT VIEW

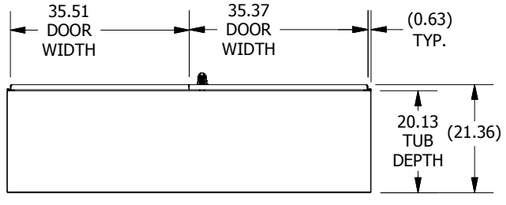

BOTTOM VIEW

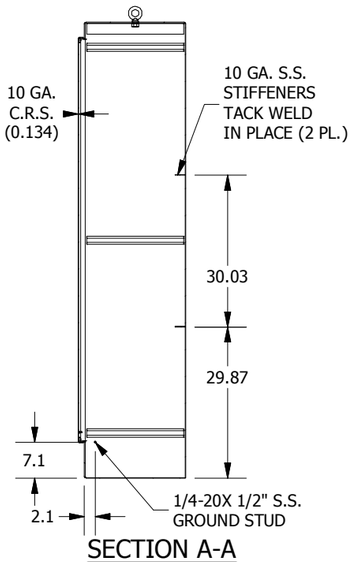

SECTION A-A
(INSIDE LEFT OF ENCL.)

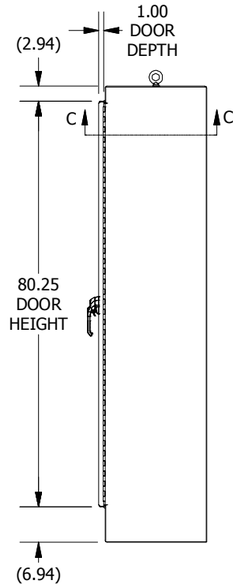

RIGHT SIDE VIEW

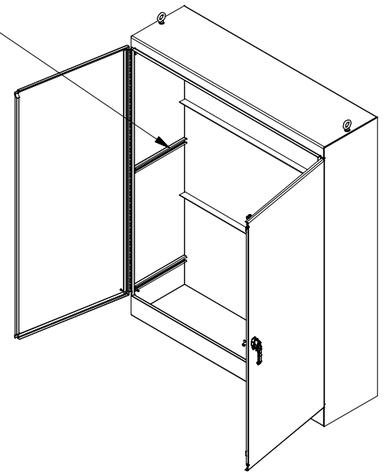

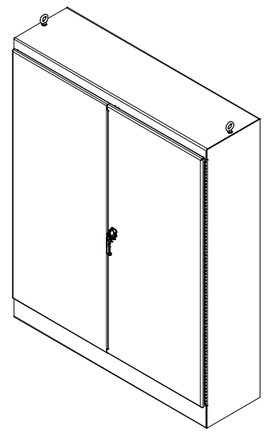

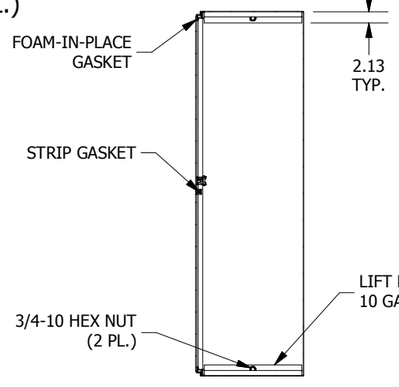

SECTION C-C

PART#: WA907220FSDSS

(DATA SUBJECT TO CHANGE WITHOUT NOTICE)

THIS DRAWING IS PROPERTY OF HUBBELL INC. WIEGMANN
ALL INFORMATION IS PROPRIETARY AND NOT TO BE DUPLICATED