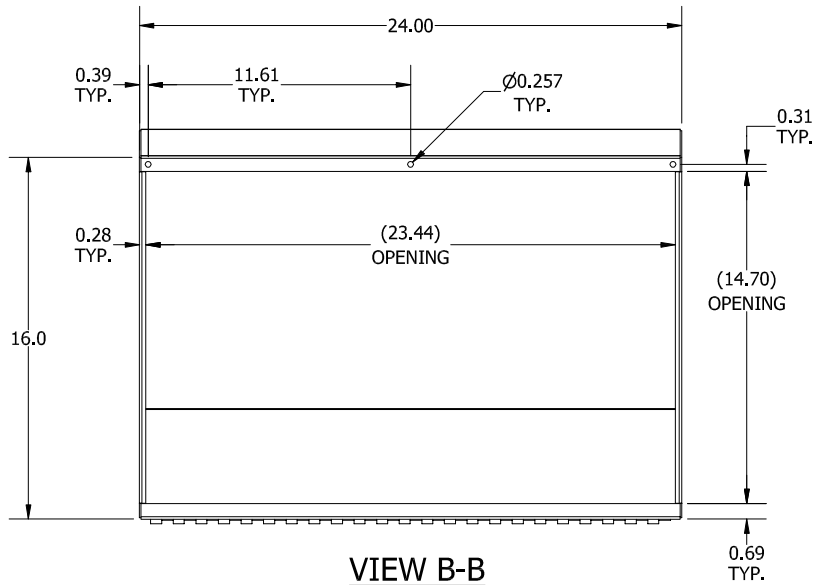

VIEW B-B
(LID ASSM. REMOVED)

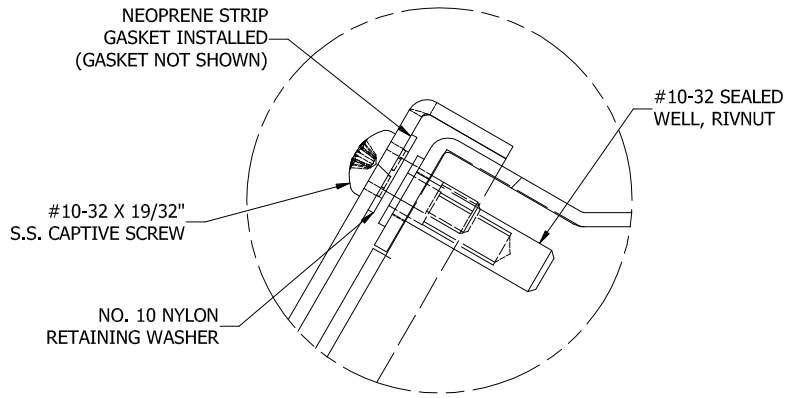

DETAIL A (3 PL.)
(LID ATTACHMENT DEATIL)

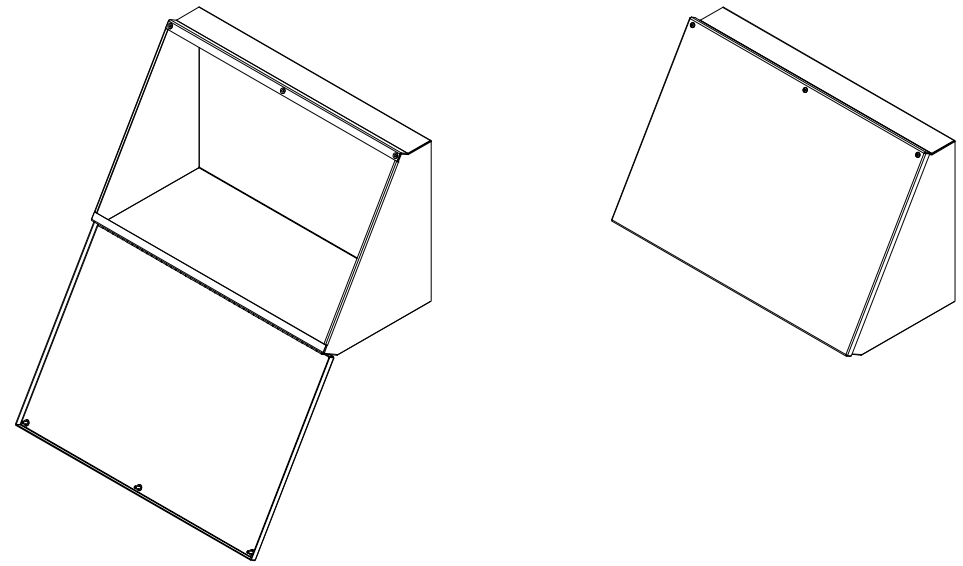

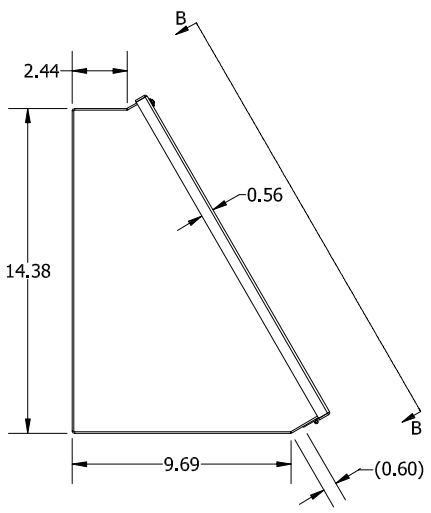

LEFT SIDE VIEW

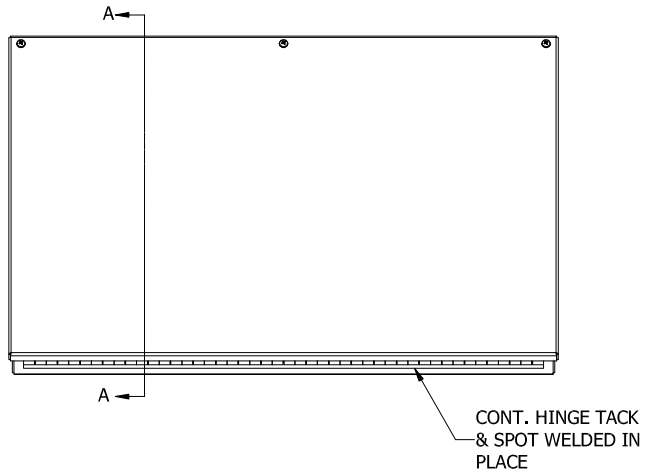

FRONT VIEW

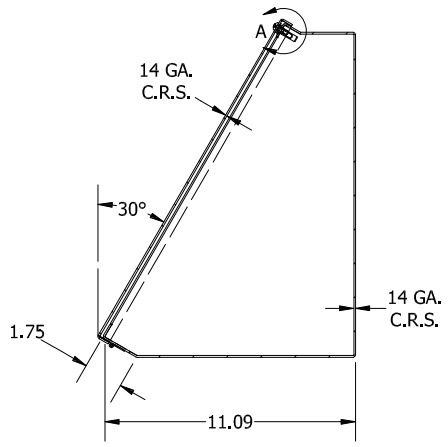

SECTION A-A VIEW
(INSIDE LEFT OF ENCL.)

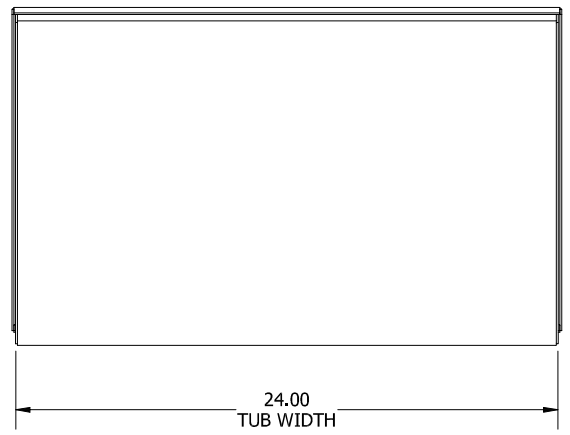

BOTTOM VIEW

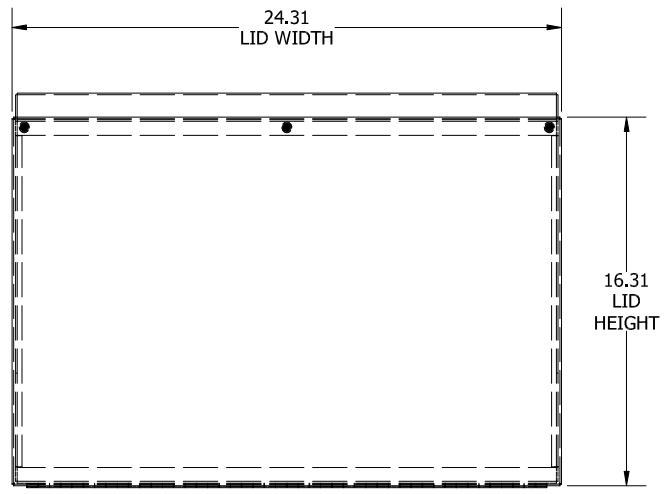

SECTION B-B
(STRAIGHT AHEAD VIEW OF LID)

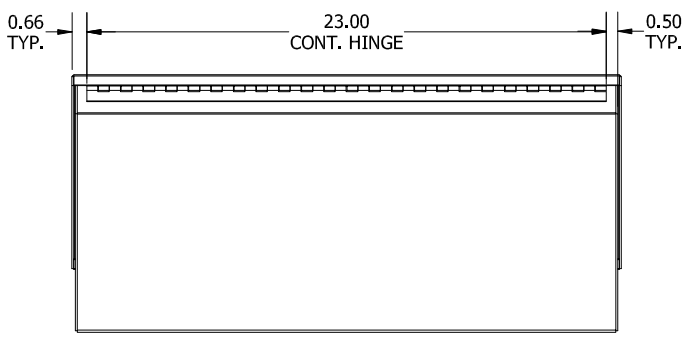

REAR VIEW

PART#: WC16C24
(DATA SUBJECT TO CHANGE WITHOUT NOTICE)

THIS DRAWING IS PROPERTY OF HUBBELL INC. WIEGMANN
ALL INFORMATION IS PROPRIETARY AND NOT TO BE DUPLICATED