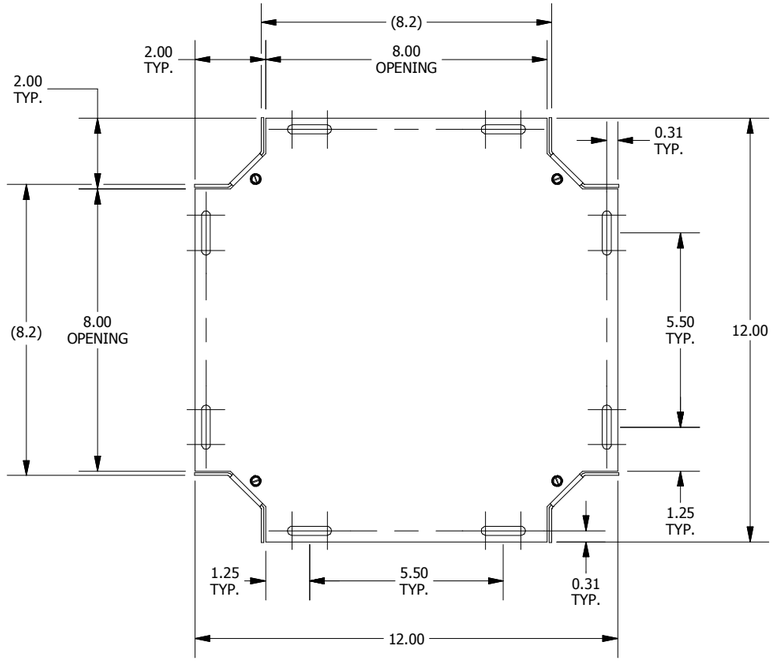

TOP VIEW

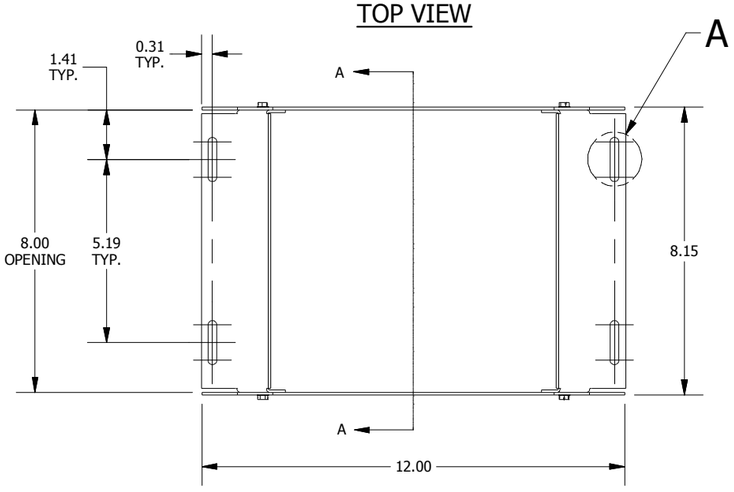

FRONT VIEW

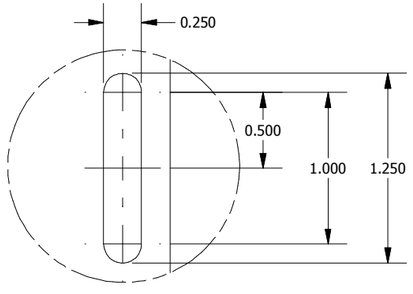

DETAIL A (32 PL.)
(SLOT DETAIL)

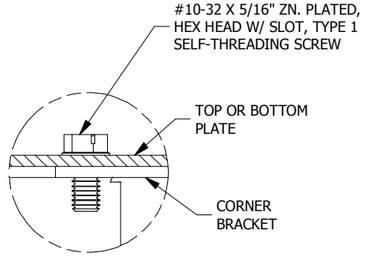

DETAIL B (8 PL.)
(ASSM. DETAIL)

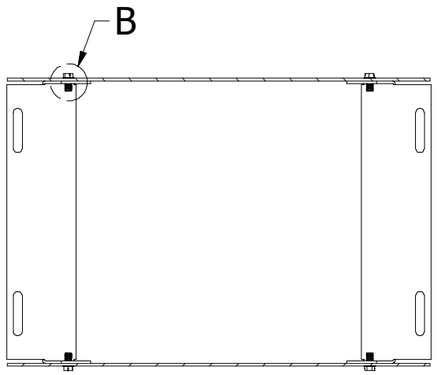

SECTION A-A
(INSIDE VIEW OF SIDE)

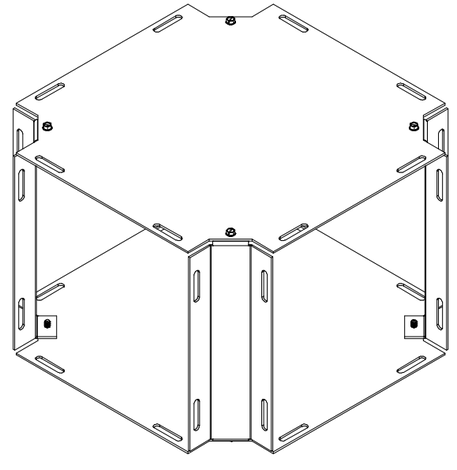

PART#: X0808
(DATA SUBJECT TO CHANGE WITHOUT NOTICE)

THIS DRAWING IS PROPERTY OF HUBBELL INC. WIEGMANN
ALL INFORMATION IS PROPRIETARY AND NOT TO BE DUPLICATED