SELECTION/DIMENSIONS

DODGE®



Setscrew Ball Bearings
SCMAH AIR HANDLING MEDIUM DUTY 4-BOLT FLANGE BEARINGS

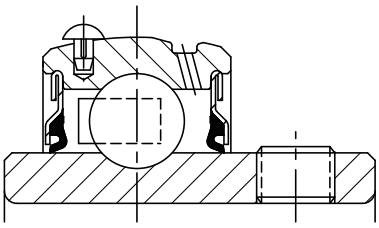

Lube Fitting Thread Size:
203 - 204 series - 1/4-28 tapered thread
207 - 207 series - 1/8-27 NPT

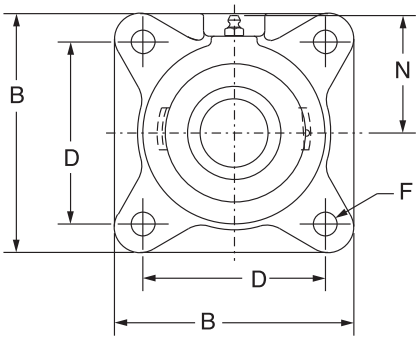

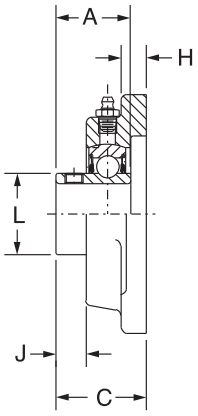

Series	Shaft Size	Part No.	Description
206	1	**053901**	F4B-SCMAH-100
	25mm	***@***	*F4B-SCMAH-25M*
207	1-3/16	**050132**	F4B-SCMAH-103
	1-1/4	**123743**	F4B-SCAH-104
	30mm	***@***	*F4B-SCMAH-30M*
208	1-7/16	**123760**	F4B-SCMAH-107
	35mm	***@***	*F4B-SCMAH-35M*
209	1-1/2	**123761**	F4B-SCMAH-108
	1-5/8	**@**	F4B-SCAH-110L
	40mm	***@***	*F4B-SCMAH-40M*
210	1-11/16	**123762**	F4B-SCMAH-111
	1-3/4	**123763**	F4B-SCMAH-112
	45mm	***067829***	*F4B-SCMAH-45M*
211	1-15/16	**123764**	F4B-SCMAH-115
	2	**068973**	F4B-SCMAH-200
	50mm	***075020***	*F4B-SCMAH-50M*
212	2-3/16	**123765**	F4B-SCMAH-203
	2-1/4	**064586**	F4B-SCMAH-204
	55mm	***@***	*F4B-SCMAH-55M*
214	2-7/16	**123766**	F4B-SCMAH-207
	2-1/2	**050662**	F4B-SCMAH-208
	65mm	***@***	*F4B-SCMAH-65M*
215	2-11/16	**123767**	F4B-SCMAH-211
	70mm	***@***	*F4B-SCMAH-70M*
216	2-15/16	**123768**	F4B-SCMAH-215
	3	**073911**	F4B-SCMAH-300
	75mm	***@***	*F4B-SCM-75M*
218	3-7/16	**123769**	F4B-SCMAH-307
	3-1/2	**057709**	F4B-SCMAH-308
	85mm	***@***	*F4B-SCMAH-85M*

@ Assembled to order

DODGE®



Setscrew Ball Bearings
SCMAH AIR HANDLING MEDIUM DUTY 4-BOLT FLANGE BEARINGS

Series	Shaft Size	Weight lbs. kgs.	A	B	C	D	F Bolt Dia.	H	J	L	N
206	1	3.0	1.52	4.25	1.56	3.25	7/16	0.50	0.49	1.57	2.19
	25mm	*1.3*	*38.6*	*108.0*	*39.6*	*82.6*	*M10*	*12.7*	*12.4*	*39.9*	*55.6*
207	1-3/16 1-1/4	4.1	1.71	4.75	1.75	3.63	1/2	0.56	0.53	1.84	2.44
	30mm	*1.7*	*43.4*	*120.7*	*44.5*	*92.1*	*M12*	*14.2*	*13.5*	*46.7*	*62.0*
208	1-7/16	5.0	1.94	5.13	1.98	4.00	1/2	0.56	0.63	2.05	2.38
	35mm	*2.1*	*49.3*	*130.3*	*50.3*	*101.6*	*M12*	*14.2*	*16.0*	*52.1*	*60.5*
209	1-1/2 1-5/8	6.1	1.94	5.38	1.99	4.13	1/2	0.63	0.59	2.22	2.75
	40mm	*2.7*	*49.3*	*136.7*	*50.5*	*104.8*	*M14*	*16.0*	*15.0*	*56.4*	*69.9*
210	1-11/16 1-3/4	7.1	1.94	5.63	2.02	4.38	1/2	0.63	0.55	2.43	2.88
	45mm	*3.0*	*49.3*	*143.0*	*51.3*	*111.1*	*M16*	*16.0*	*14.0*	*61.7*	*73.2*
211	1-15/16 2	9.5	2.22	6.50	2.28	5.13	5/8	0.69	0.68	2.71	3.25
	50mm	*4.1*	*56.4*	*165.1*	*57.9*	*130.2*	*M16*	*17.5*	*17.3*	*68.8*	*82.6*
212	2-3/16 2-1/4	11.3	2.31	6.88	2.38	5.63	5/8	0.69	0.66	2.97	3.50
	55mm	*6.0*	*58.7*	*174.8*	*60.5*	*142.9*	*M16*	*17.5*	*16.8*	*75.4*	*88.9*
214	2-7/16 2-1/2	16.2	2.54	7.38	2.78	5.88	5/8	0.69	0.60	3.31	3.69
	65mm	*7.3*	*64.5*	*187.5*	*70.6*	*149.2*	*M16*	*17.5*	*15.2*	*84.1*	*93.7*
215	2-11/16	18.3	2.33	7.75	2.88	6.00	3/4	1.00	0.63	3.62	3.88
	70mm	*8.0*	*59.2*	*196.9*	*73.2*	*152.4*	*M18*	*25.4*	*16.0*	*91.9*	*98.6*
216	2-15/16 3	21.5	2.38	7.75	3.09	6.00	3/4	0.88	0.59	3.83	4.09
	75mm	*9.4*	*60.5*	*196.9*	*78.5*	*152.4*	*M18*	*22.4*	*15.0*	*97.3*	*103.9*
218	3-7/16 3-1/2	28.0	2.56	8.44	3.38	6.75	3/4	1.00	0.60	4.35	4.63
	85mm	*12.2*	*65.0*	*214.4*	*85.9*	*171.5*	*M18*	*25.4*	*15.2*	*110.5*	*117.6*

FEATURES/BENEFITS PAGE B4-3	HOW TO ORDER/NOMENCLATURE PAGE B4-5	SELECTION PAGE B4-6	ACCESSORIES PAGE B4-98