SELECTION/DIMENSIONS

Setscrew Ball Bearings

SC NORMAL DUTY WIDE SLOT TAKE-UP BEARINGS

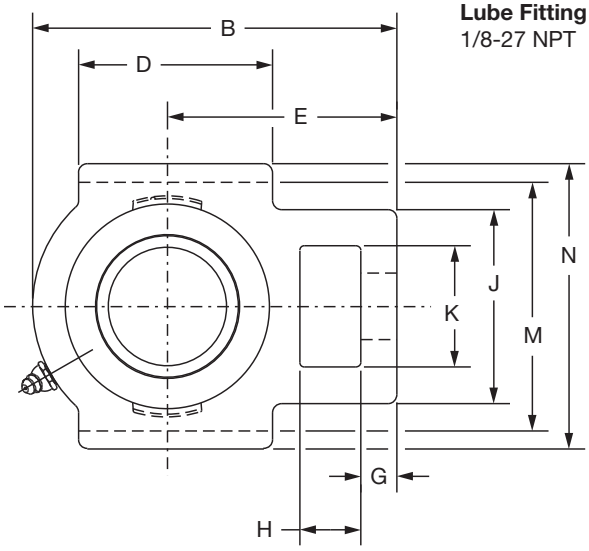

Lube Fitting Thread Size:
1/8-27 NPT

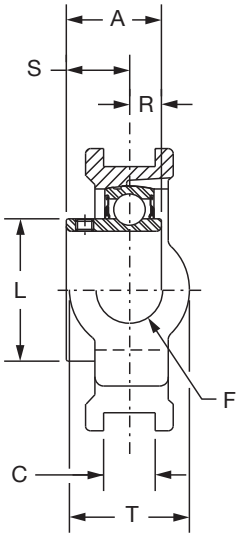

Series	Shaft Size	Standard		No Lube/Sealed for Life (-NL)	
		Part No.	Description	Part No.	Description
204	1/2	**125343**	WSTU-SC-008	**@**	WSTU-SC-008-NL
	5/8	**125344**	WSTU-SC-010	**@**	WSTU-SC-010-NL
	3/4	**125010**	WSTU-SC-012	**074935**	WSTU-SC-012-NL
	20mm	***125910***	*WSTU-SC-20M*	**@**	*WSTU-SC-20M-NL*
205	7/8	**125356**	WSTU-SC-014	**@**	WSTU-SC-014-NL
	15/16	**125011**	WSTU-SC-015	**@**	WSTU-SC-015-NL
	1	**125012**	WSTU-SC-100	**@**	WSTU-SC-100-NL
	25mm	***125911***	*WSTU-SC-25M*	**@**	*WSTU-SC-25M-NL*
206	1-1/16	**125357**	WSTU-SC-101	**@**	WSTU-SC-101-NL
	1-1/8	**125358**	WSTU-SC-102	**@**	WSTU-SC-102-NL
	1-3/16	**125113**	WSTU-SC-103	**@**	WSTU-SC-103-NL
	1-1/4	**123175**	WSTU-SC-104S	**@**	WSTU-SC-104S-NL
	30mm	***125912***	*WSTU-SC-30M*	**@**	*WSTU-SC-30M-NL*
207	1-1/4	**125360**	WSTU-SC-104	**073793**	WSTU-SC-104-NL
	1-5/16	**125359**	WSTU-SC-105	**@**	WSTU-SC-105-NL
	1-3/8	**125361**	WSTU-SC-106	**@**	WSTU-SC-106-NL
	1-7/16	**125114**	WSTU-SC-107	**050846**	WSTU-SC-107-NL
	35mm	***125913***	*WSTU-SC-35M*	**@**	*WSTU-SC-35M-NL*
208	1-1/2	**125120**	WSTU-SC-108	**049829**	WSTU-SC-108-NL
	1-5/8	**125355**	WSTU-SC-110	**@**	WSTU-SC-110-NL
	40mm	***125914***	*WSTU-SC-40M*	**@**	*WSTU-SC-40M-NL*

@ Assembled to order

DODGE®



Setscrew Ball Bearings
SC NORMAL DUTY WIDE SLOT TAKE-UP BEARINGS

Series	Shaft Size	Weight lbs. kgs.	Take-Up Frame Size	A	B	C	D	E	F	G	H
204	1/2	2.1	WS300	1.23	3.69	0.531	2.00	2.38	5/8	0.38	0.63
	5/8	2.0									
	3/4	1.9									
	20mm	*0.9*		*31.2*	*93.7*	*13.49*	*50.8*	*60.5*	*15.9*	*9.7*	*16.0*
205	7/8	2.2	WS300	1.34	3.81	0.531	2.00	2.44	5/8	0.38	0.63
	15/16	2.1									
	1	2.0									
	25mm	*1.0*		*34.0*	*96.8*	*13.49*	*50.8*	*62.0*	*15.9*	*9.7*	*16.0*
206	1-1/16	3.1	WS308	1.52	4.38	0.531	2.25	2.75	3/4	0.38	0.63
	1-1/8	3.0									
	1-3/16	2.9									
	1-1/4	2.8									
	30mm	*1.3*		*38.6*	*111.3*	*13.49*	*57.2*	*69.9*	*19.1*	*9.7*	*16.0*
207	1-1/4	3.8	WS308	1.71	4.87	0.531	2.50	3.06	3/4	0.50	0.63
	1-5/16	3.7									
	1-3/8	3.6									
	1-7/16	3.5									
	35mm	*1.6*		*43.4*	*123.7*	*13.49*	*63.5*	*77.7*	*19.1*	*12.7*	*16.0*
208	1-1/2	6.1	WS400	1.94	5.69	0.688	3.25	3.50	1	0.63	0.75
	1-5/8	6.0									
	40mm	*2.8*		*49.3*	*144.5*	*17.48*	*82.6*	*88.9*	*25.4*	*16.0*	*19.1*

Series	Shaft Size	J	K	L	M	N	R	S	T
204	1/2	2.00	1.25	1.12	2.985/3.015	3.63	0.50	0.73	1.38
	5/8								
	3/4								
	20mm	*50.8*	*31.8*	*28.4*	*75.82/76.58*	*92.2*	*12.7*	*18.5*	*35.1*
205	7/8	2.00	1.31	1.32	2.985/3.015	3.63	0.56	0.78	1.38
	15/16								
	1								
	25mm	*50.8*	*33.3*	*33.5*	*75.82/76.58*	*92.2*	*14.2*	*19.8*	*35.1*
206	1-1/16	2.19	1.44	1.57	3.480/3.510	4.13	0.58	0.94	1.63
	1-1/8								
	1-3/16								
	1-1/4								
	30mm	*55.6*	*36.6*	*39.9*	*88.39/89.15*	*104.9*	*14.7*	*23.9*	*41.3*
207	1-1/4	2.50	1.44	1.84	3.480/3.510	4.13	0.67	1.04	1.63
	1-5/16								
	1-3/8								
	1-7/16								
	35mm	*63.5*	*36.6*	*46.7*	*88.39/89.15*	*104.9*	*17.0*	*26.4*	*41.3*
208	1-1/2	3.25	1.94	2.05	3.985/4.015	4.50	0.75	1.19	1.94
	1-5/8								
	40mm	*82.6*	*49.3*	*52.1*	*101.22/101.98*	*114.3*	*19.1*	*30.2*	*49.3*

SELECTION/DIMENSIONS

Setscrew Ball Bearings
SC NORMAL DUTY WIDE SLOT TAKE-UP BEARINGS

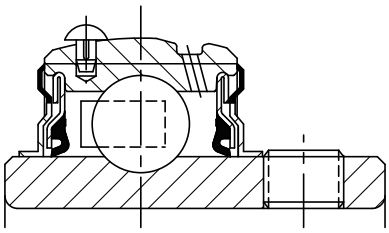

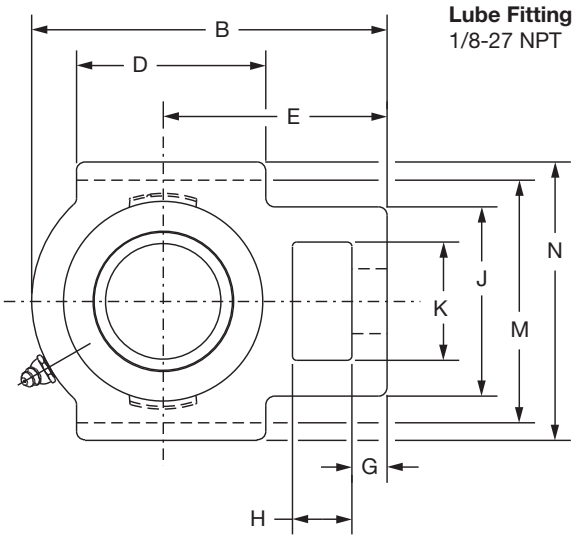

Lube Fitting Thread Size:
1/8-27 NPT

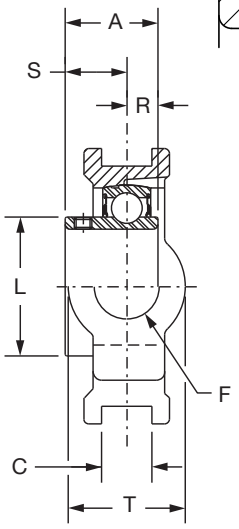

Series	Shaft Size	Standard		No Lube/Sealed for Life (-NL)	
		Part No.	Description	Part No.	Description
209	1-5/8	**125151**	WSTU-SC-110L	@	WSTU-SC-110L-NL
	1-11/16	**125115**	WSTU-SC-111	@	WSTU-SC-111-NL
	1-3/4	**125362**	WSTU-SC-112	@	WSTU-SC-112-NL
	1-13/16	**125121**	WSTU-SC-113	@	WSTU-SC-113-NL
	45mm	***125915***	*WSTU-SC-45M*	@	*WSTU-SC-45M-NL*
210	1-15/16	**125116**	WSTU-SC-115	**125071**	WSTU-SC-115-NL
	2	**125363**	WSTU-SC-200	**062691**	WSTU-SC-200-NL
	50mm	***125916***	*WSTU-SC-50M*	***068374***	*WSTU-SC-50M-NL*
211	2	**135183**	WSTU-SCM-200	**058705**	WSTU-SCM-200-NL
	2-3/16	**125117**	WSTU-SC-203	@	WSTU-SC-203-NL
	2-1/4	**125364**	WSTU-SC-204	@	WSTU-SC-204-NL
	55mm	***125917***	*WSTU-SC-55M*	@	*WSTU-SC-55M-NL*
212	2-1/4	**135184**	WSTU-SCM-204	@	WSTU-SCM-204-NL
	2-7/16	**125118**	WSTU-SC-207	@	WSTU-SC-207-NL
	60mm	***125918***	*WSTU-SC-60M*	@	*WSTU-SC-60M-NL*
214	2-1/2	**135185**	WSTU-SCM-208	@	WSTU-SCM-208-NL
	2-11/16	**064704**	WSTU-SC-211	@	WSTU-SC-211-NL
	70mm	***062975***	*WSTU-SC-70M*	@	*WSTU-SC-70M-NL*
215	2-15/16	**125119**	WSTU-SC-215	@	WSTU-SC-215-NL
	75mm	***125919***	WSTU-SC-75M	@	WSTU-SC-75M-NL

@ Assembled to order

DODGE®



Setscrew Ball Bearings
SC NORMAL DUTY WIDE SLOT TAKE-UP BEARINGS

Series	Shaft Size	Weight lbs *kgs.*	Take-Up Frame Size	A	B	C	D	E	F Screw Dia.	G
	1-5/8	6.1		1.94	5.63	0.688	3.25	3.44	1	0.63
	1-11/16	6.0								
209	1-3/4	5.9	WS400							
	1-13/16	5.8								
	45mm	*2.7*		*49.3*	*143.0*	*17.48*	*82.6*	*87.4*	*25.4*	*16.0*
	1-15/16	6.4		1.94	5.82	0.688	3.38	3.56	1	0.63
210	2	6.2	WS400							
	50mm	*2.9*		*49.3*	*147.8*	*17.48*	*85.9*	*90.4*	*25.4*	*16.0*
	2	10.1		*2.22*	*6.69*	*1.063*	*3.75*	*4.19*	*1-1/4*	*0.75*
211	2-3/16	10.0	WS502							
	2-1/4	9.8								
	55mm	*4.5*		*56.4*	*169.9*	*27.00*	*95.3*	*106.4*	*31.8*	*19.1*
	2-1/4	11.2		2.31	7.50	1.063	4.00	4.69	1-1/4	0.75
212	2-7/16	10.8	WS502							
	60mm	*4.9*		*58.7*	*190.5*	*27.00*	*101.6*	*119.1*	*31.8*	*19.1*
	2-1/2	18.0		2.54	8.56	1.063	4.75	5.38	1-1/2	*0.81*
214	2-11/16	17.8	WS515							
	70mm	*8.0*		*64.5*	*217.4*	*27.0*	*120.7*	*136.7*	*38.1*	*20.6*
215	2-15/16	18.9	WS515	2.33	9.13	1.063	4.75	5.50	1-1/2	0.81
	75mm	*8.6*		*59.2*	*231.9*	*27.00*	*120.7*	*139.7*	*38.1*	*20.6*

Series	Shaft Size	H	J	K	L	M	N	R	S	T
	1-5/8	0.75	3.25	1.94	2.22	3.985/4.015	4.75	0.75	1.19	1.94
	1-11/16									
209	1-3/4									
	1-13/16									
	45mm	*19.1*	*82.6*	*49.3*	*56.4*	*101.22/101.98*	*120.7*	*19.1*	*30.2*	*49.3*
	1-15/16	0.75	3.25	1.94	2.43	3.985/4.015	4.75	0.75	1.19	1.94
210	2									
	50mm	*19.1*	*82.6*	*49.3*	*61.7*	*101.22/101.98*	*120.7*	*19.1*	*30.2*	*49.3*
	2	*1.00*	*4.00*	*2.50*	*2.71*	*5.110/5.140*	*5.88*	*0.87*	*1.35*	*2.50*
211	2-3/16									
	2-1/4									
	55mm	*25.4*	*101.6*	*63.5*	*68.8*	*129.79/130.56*	*149.4*	*22.1*	*34.3*	*63.5*
	2-1/4	1.25	4.00	2.50	2.97	5.110/5.140	5.88	0.90	1.41	2.50
212	2-7/16									
	60mm	*31.8*	*101.6*	*63.5*	*75.4*	*129.79/130.56*	*149.4*	*22.9*	*35.8*	*63.5*
	2-1/2	1.25	4.38	2.75	3.31	5.923/5.953	6.56	1.06	1.48	2.75
214	2-11/16									
	70mm	*31.8*	*111.3*	*69.9*	*84.1*	*150.44/151.21*	*166.6*	*26.9*	*37.6*	*69.9*
	2-15/16	1.25	4.38	2.75	3.62	5.923/5.953	6.69	0.86	1.47	2.75
215	*75mm*	*31.8*	*111.3*	*69.9*	*91.9*	*150.44/151.21*	*169.9*	*21.8*	*37.3*	*69.9*

*+ or -.015", + or -.38mm

+.010, -.020" +.25mm, -.50mm

FEATURES/BENEFITS PAGE B4-3	HOW TO ORDER/NOMENCLATURE PAGE B4-5	SELECTION PAGE B4-6	ACCESSORIES PAGE B4-98