Eccentric Collar Ball Bearings

For more than 70 years, DODGE® has been talking to mounted bearing users and listening to their needs. This experience led to design of the optimum mounted ball bearings.

The result is the DODGE SXR/SXV/SLX line. It is the most current eccentric collar mounted ball bearing design on the market and provides the user unmatched quality and true total value.

The DODGE eccentric ball bearing is manufactured at the state-of-the-art DODGE bearing plant in Rogersville, Tennessee - an ISO 9002 certified plant.

- Precision-hardened inner ring
- Light Duty Narrow Inner Ring (SLX)
- Intermediate Duty Narrow Inner Ring (SXV)
- Normal-Duty Wide Inner Ring (SXR)
- Eccentric collar locking system
- DODGE PROGUARD™ land-riding, positive contact seal
- Stronger, flexible ball cage
- Simplified anti-rotation device
- Wide variety of housing configurations
- Available in 1/2″ to 2-15/16″, 17 to 75mm bore sizes
- SXR Seal options:
  - flingers
  - low torque labyrinth
- Other options:
  - corrosion-resistant inserts
  - FDA/USDA lubricant and other special lubricants
  - TEFLON® coated housings
  - nylon-coated housings
  - nickel-plated housings

Precision-hardened Inner Ring

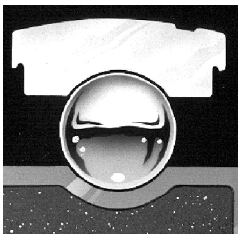

Precision-hardened inner ring: hard outer surface, ductile core

Precision-hardened inner rings resist cracking and breaking - a common cause of failure in eccentric mounted ball bearings. Precision-hardened inner ring provides superior shock load absorption in the eccentric collar area.

DODGE Self-locking Collar



The inner ring of the bearing is locked to the shaft by a quarter-turn of the eccentric collar in the direction of shaft rotation. The collar is secured in place with a single setscrew.

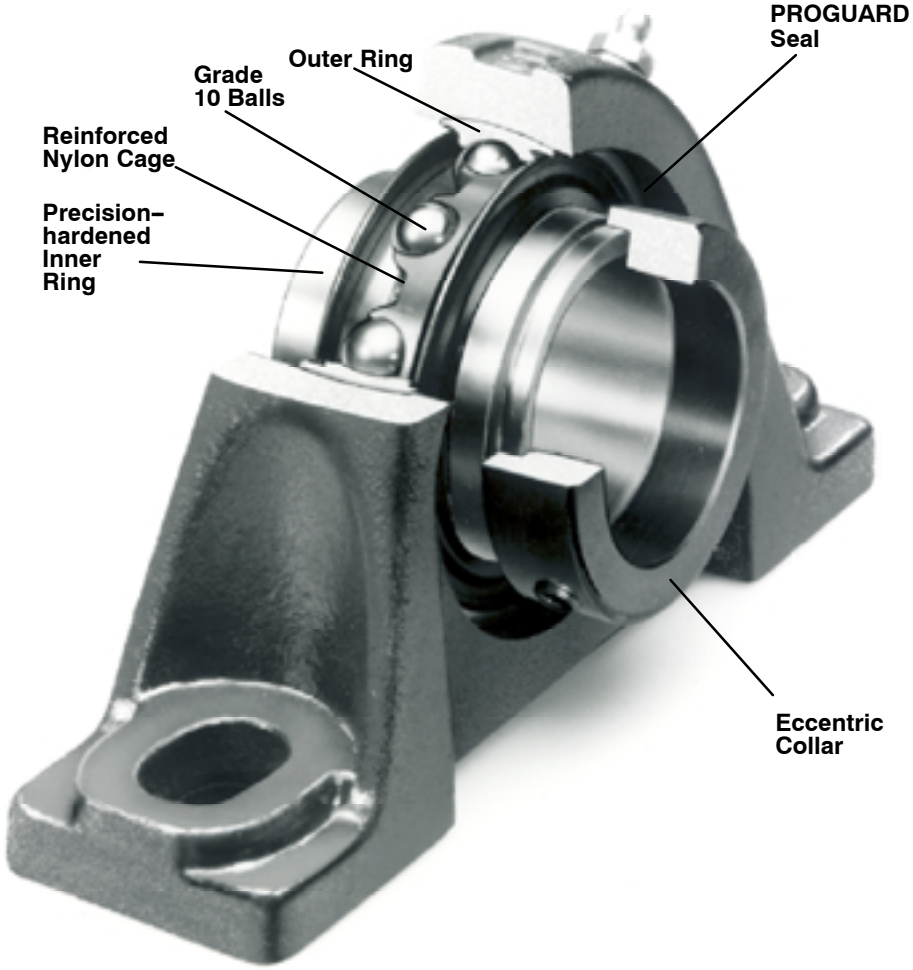

Eccentric Collar Ball Bearings

Flingers

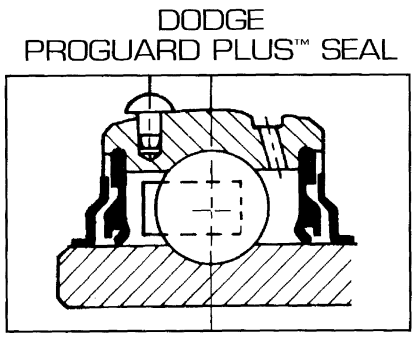

On SXR bearings, optional flingers can be added to form a tight labyrinth with the PROGUARD Seal and provide additional seal protection against contaminants and debris.

DODGE PROGUARD™ Seal

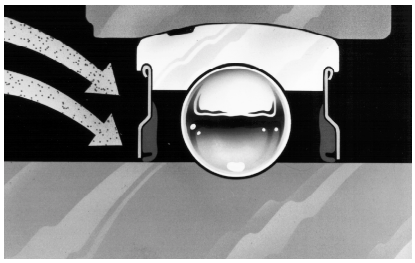

PROGUARD positive contact low drag seal

DODGE SXR/SXV/SLX mounted ball bearings use the PROGUARD land-riding contact seal with steel shield protection. This highly effective, positive seal design assures uniform lip contact with the inner ring to seal out contaminants and seal in lubricants.

Stronger, Flexible Cage

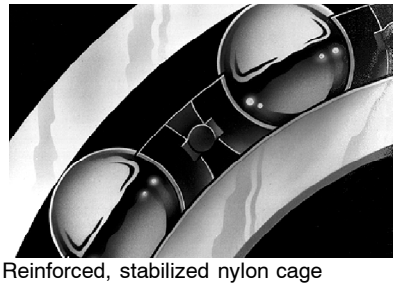

Reinforced, stabilized nylon cage

The ball cage is made of heat-stabilized nylon with 33% fill short fiberglass reinforcement for added strength. The nylon material provides a natural lubricity for longer life. Fiberglass reinforcement allows higher operating temperatures than plain nylon, yet it is more resistant to fatigue than metallic cages. Short fiberglass allows greater flexibility than steel or normal fiberglass, especially under misalignment. That means longer life in mounted bearings where some degree of misalignment is unavoidably encountered.

Anti-Rotation Pin

An anti-rotation pin prevents rotation of the outer race within the housing. Simple and effective, it makes system inserts easier to replace. There is no need to remove and replace grease fittings, location pins or other devices.



Wide Variety Of Housing Configurations

DODGE provides a wide variety of durable eccentric mounted ball bearings. Housing configurations include:

- Pillow blocks
- Flange bearings (2- and 4-bolt)
- Hanger bearings
- Cylindrical units
- Take-up bearings
- Take-up frames

In Stock Near You

The complete line of DODGE mounted ball bearings is available at your local authorized DODGE distributor. For more information, check the yellow pages for your local distributor, call (864) 297-4800 or fax (864)-281-2318.

Teflon® is a registered trademark of E.I. Du Pont.