Eccentric Collar Ball Bearings - Metric

SXR Normal Duty Metric Pillow Blocks

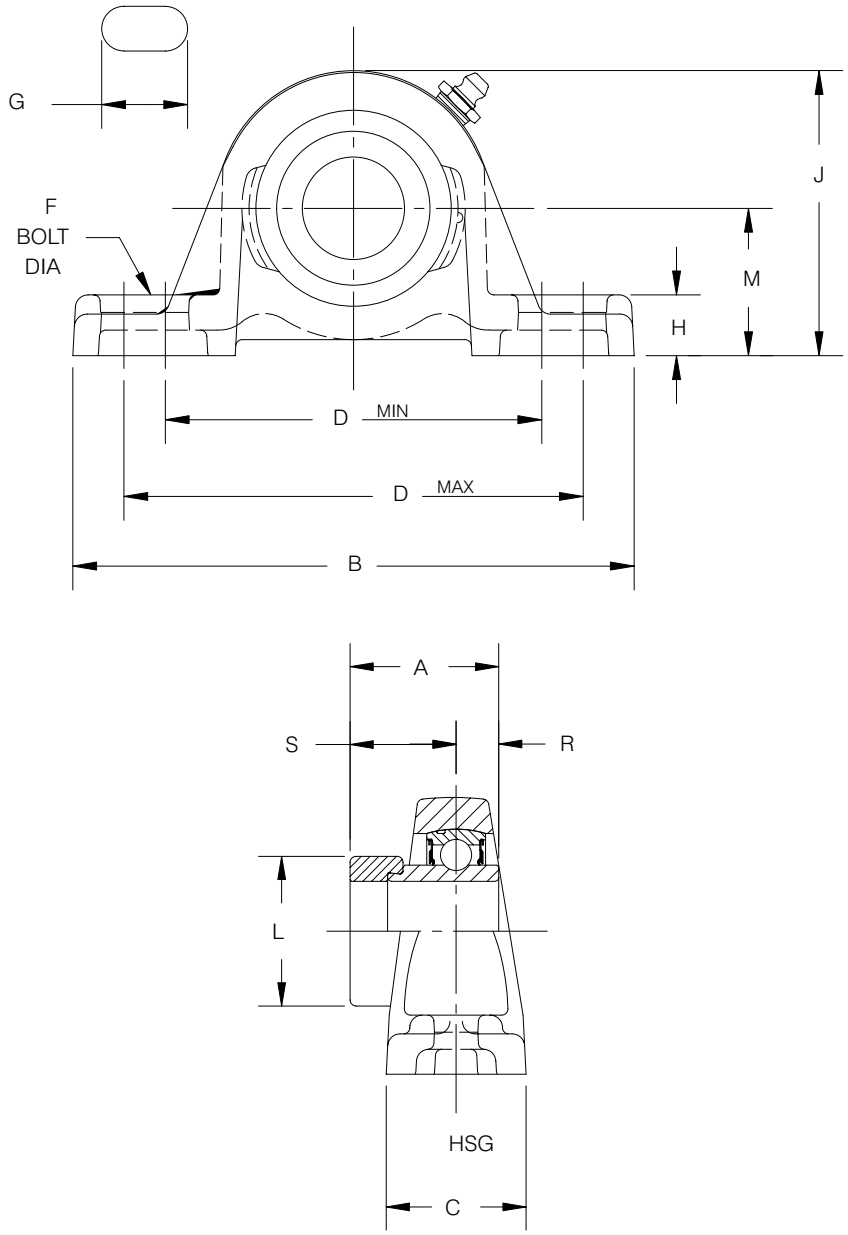

FEATURE/BENEFITS ECCENTRIC COLLAR BALL BRGS PAGE 126	HOW TO ORDER/ NOMENCLATURE PAGE 128	SELECTION PAGE 129	DIMENSIONS SXR INCH PILLOW BLOCKS PAGE 134

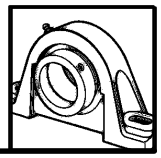

Eccentric Collar Ball Bearings - Metric

SXR Normal Duty Metric Pillow Blocks

Series	Shaft Size, mm	Part Number	Description	Weight lbs.	A	B	C	D	
								Min.	Max.
203 (SXRU)	17	**125655**	P2B-SXRU-17M	0.4	37.3	127.0	31.0	82.6	103.2
204	20	**125656**	P2B-SXR-20M	0.6	43.7	133.4	34.1	85.7	111.1
205	25	**125657**	P2B-SXR-25M	0.7	44.5	139.7	35.7	93.7	114.3
206 (SXRU)	30	**125658**	P2B-SXRU-30M	1.2	48.4	158.5	44.5	108.0	127.0
207	35	**125659**	P2B-SXR-35M	1.9	51.2	165.1	44.5	119.1	138.1
208	40	**125660**	P2B-SXRB-40M	2.2	5604	184.2	49.2	131.8	149.2
209	45	**125661**	P2B-SXR-45M	2.8	56.4	188.9	50.8	139.7	157.2
210	50	**125662**	P2B-SXR-50M	3.2	62.7	206.4	57.2	152.4	169.9
211	55	**125663**	P2B-SXR-55M	4.1	71.4	225.4	58.7	161.9	188.9
212	60	**125664**	P2B-SXR-60M	5.0	77.8	241.3	60.3	174.6	201.6
215 (SXRU)	75	**125665**	P2B-SXRU-75M	9.3	92.1	298.5	73.0	215.9	241.3

Series	Shaft Size, mm	F Bolt Dia.	G	H	J	L	M	R	S
203 (SXRU)	17	M10	21.4	12.7	57.9	27.0	30.2	6.34	22.2
204	20	M10	21.4	13.5	65.1	33.3	33.3	17.1	28.6
205	25	M10	21.4	15.1	70.6	38.1	36.5	17.1	27.4
206 (SXRU)	30	M12	23.8	19.1	84.1	44.5	42.9	16.3	30.2
207	35	M12	23.8	18.3	95.3	54.0	47.6	19.1	32.2
208	40	M12	23.0	19.0	101.8	80.3	54.0	21.4	34.9
209	45	M12	23.0	19.1	108.7	83.5	54.0	21.4	34.9
210	50	M16	26.2	19.1	115.1	69.9	57.2	24.6	38.1
211	55	M16	31.0	22.2	126.2	76.2	63.5	27.6	43.7
212	60	M16	31.0	22.2	137.3	84.1	69.9	30.6	47.2
215 (SXRU)	75	M22	36.5	19.1	165.1	101.5	82.6	49.2	54.8

DIMENSIONS
SXR METRIC INSERTS
PAGE 178

MODIFICATIONS
PAGE 180

RELATED PRODUCTS
PAGE 181