SELECTION/DIMENSIONS

Eccentric Collar Ball Bearings
SLX LIGHT DUTY PILLOW BLOCKS

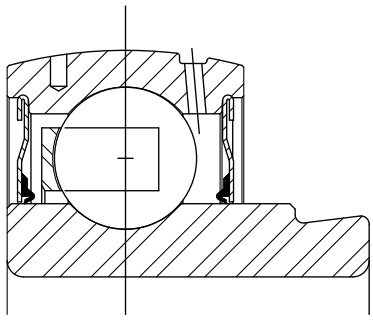

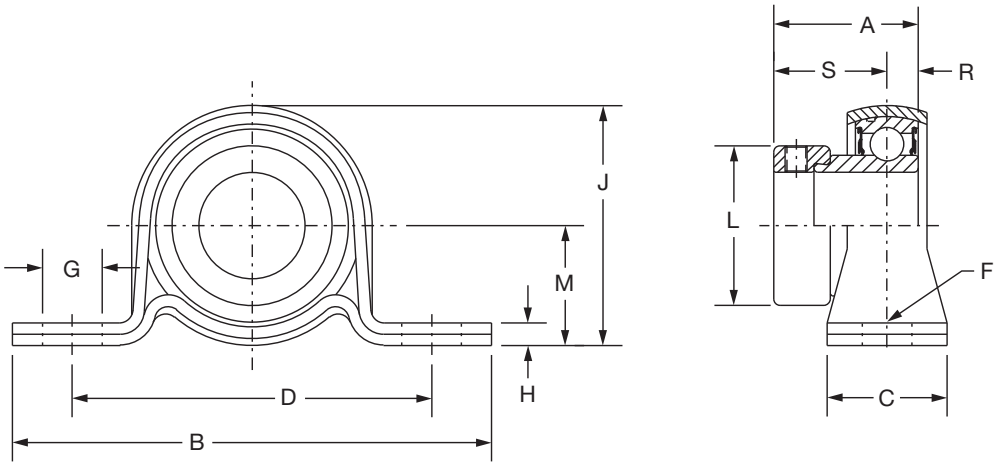

Series	Shaft Size	Part No.	Description
203	1/2	@	P2B-SLX-008
	5/8	**052932**	P2B-SLX-010
	17mm	@	*P2B-SLX-17M*
204	3/4	**128130**	P2B-SLX-012
	20mm	@	*P2B-SLX-20M*
205	7/8	**128131**	P2B-SLX-014
	15/16	**128132**	P2B-SLX-015
	1	**128133**	P2B-SLX-100
	25mm	@	*P2B-SLX-25M*
206	1-1/8	**128134**	P2B-SLX-102
	1-3/16	**128135**	P2B-SLX-103
	1-1/4	**128136**	P2B-SLX-104S
	30mm	@	*P2B-SLX-30M*
207	1-1/4	**128183**	P2B-SLX-104
	1-3/8	**128184**	P2B-SLX-106
	1-7/16	**128185**	P2B-SLX-107
	35mm	@	*P2B-SLX-35M*

@ Assembled to order.

DODGE®



Eccentric Collar Ball Bearings
SLX LIGHT DUTY PILLOW BLOCKS

Series	Shaft Size	Weight lbs *kg*	A	B	C	D	F Bolt Dia.	G	H	J	L	M	R	S	Housing Radial Load Rating (lbs)
203	1/2	0.52	1.13	3.63	1.00	2.69	1/4	0.50	0.13	1.75	1.13	0.88	0.26	0.87	250
	5/8	0.50													
	17mm	*.23*	28.7	92.2	25.4	68.3	M6	12.7	3.3	44.5	28.7	22.4	6.6	22.1	*1,112*
204	3/4	0.61	1.22	4.13	1.00	3.00	3/8	0.50	0.15	2.06	1.31	1.00	0.30	0.92	350
	20mm	*.27*	31.0	104.9	25.4	76.2	M10	12.7	3.8	52.3	33.3	25.4	7.6	23.4	*1,556*
205	7/8	0.79	1.22	4.50	1.13	3.38	3/8	0.56	0.21	2.22	1.50	1.13	0.30	0.92	400
	15/16	0.76													
	1	0.73													
	25mm	*.34*	31.0	114.3	28.7	85.9	M10	14.2	5.3	56.4	38.1	28.7	7.6	23.4	*1,779*
206	1-1/8	1.14	1.41	4.88	1.25	3.75	3/8	0.56	0.24	2.62	1.75	1.31	0.35	1.05	600
	1-3/16	1.12													
	1-1/4	1.10													
	30mm	*.50*	35.8	124.0	31.8	95.3	M10	14.2	6.1	66.5	44.5	33.3	8.9	26.7	*2,668*
207	1-1/4	1.54	1.53	5.75	1.25	4.25	1/2	0.75	0.24	3.12	2.13	1.56	0.37	1.16	800
	1-3/8	1.50													
	1-7/16	1.48													
	35mm	*.67*	38.9	146.1	31.8	108.0	M12	19.1	6.1	79.2	54.1	39.6	9.4	29.5	*3,557*

FEATURES/BENEFITS PAGE B9-2	SELECTION PAGE B9-6	HOW TO ORDER/NOMENCLATURE PAGE B7-5	MODIFICATIONS/ACCESSORIES PAGE B9-36