SELECTION/DIMENSIONS

DODGE®



GRIP TIGHT Adapter Ball Bearings
GT NORMAL DUTY 4-BOLT FLANGE BEARINGS

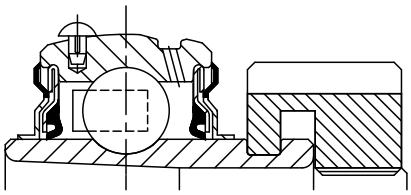

Lube Fitting Thread Size -
203 Series - 1/4-28 Tapered Thread
204 Series and Larger - 1/8-27 NPT

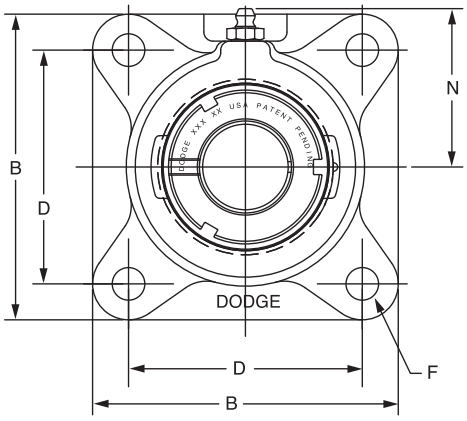

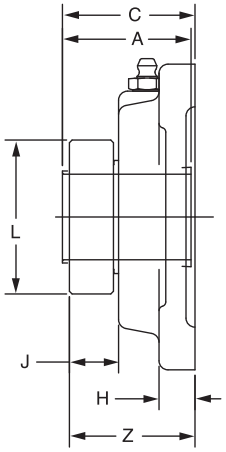

Series	Shaft Size	Complete Unit		Unit without Adapter Sleeve & Lock Nut		Adapter Sleeve & Lock Nut Assembly	
		Part No.	Description	Part No.	Description	Part No.	Description
208	1-1/2	**129649**	F4B-GT-108	**129469**	F4B-GT-08	**136530**	AN-GT-08-108-D
	1-5/8	**129374**	F4B-GT-110			**136592**	AN-GT-08-110-D
	40mm	***129672***	*F4B-GT-40M*			***136593***	*AN-GT-08-40M*-D
209	1-5/8	**129650**	F4B-GT-110L	**129470**	F4B-GT-09	**136531**	AN-GT-09-110L-D
	1-11/16	**129651**	F4B-GT-111			**136532**	AN-GT-09-111-D
	1-3/4	**129652**	F4B-GT-112			**136533**	AN-GT-09-112-D
	45mm	***129673***	*F4B-GT-45M*			***136557***	*AN-GT-09-45M*-D
210	1-15/16	**129653**	F4B-GT-115	**129471**	F4B-GT-10	**136534**	AN-GT-10-115-D
	2	**129654**	F4B-GT-200			**136535**	AN-GT-10-200-D
	50mm	***129674***	*F4B-GT-50M*			***136558***	*AN-GT-10-50M*-D
211	2	**129687**	F4B-GTM-200	**129472**	F4B-GT-11	**136600**	AN-GTM-11-200-D
	2-3/16	**129655**	F4B-GT-203			**136536**	AN-GT-11-203-D
	2-1/4	**129379**	F4B-GT-204			**136537**	AN-GT-11-204-D
	55mm	***129675***	*F4B-GT-55M*			***136559***	*AN-GT-11-55M*-D
212	2-1/4	**129689**	F4B-GTM-204	**129473**	F4B-GT-12	**136601**	AN-GTM-12-204-D
	2-7/16	**129656**	F4B-GT-207			**136538**	AN-GT-12-207-D
	60mm	***129676***	*F4B-GT-60M*			***136594***	*AN-GT-12-60M*-D
214	2-1/2	**129691**	F4B-GTM-208	**129474**	F4B-GT-14	**136548**	AN-GTM-14-208-D
	2-11/16	**129657**	F4B-GT-211			**136539**	AN-GT-14-211-D
	70mm	***129677***	*F4B-GT-70M*			***136560***	*AN-GT-14-70M*-D
215	2-15/16	**129658**	F4B-GT-215	**129475**	F4B-GT-15	**136540**	AN-GT-15-215-D
	3	**075700**	F4B-GT-300			**136595**	AN-GT-15-300-D
	75mm	***129678***	*F4B-GT-75M*			***136596***	*AN-GT-15-75M*-D

@Assembled to order

FEATURES/BENEFITS PAGE B5-2	HOW TO ORDER/NOMENCLATURE PAGE B5-4	SELECTION PAGE B5-5	RELATED PRODUCTS PAGE B5-70



GRIP TIGHT Adapter Ball Bearings
GT NORMAL DUTY 4-BOLT FLANGE BEARINGS

Series	Shaft Size	Weight lbs *kg*	A	B	C#	D	F Bolt Dia.	H	J	L	N	Z
208	1-1/2 1-5/8 *40mm*	5.8 5.6 *2.6*	1.84 *46.7*	5.13 *130.3*	2.01 *51.1*	4.00 *101.6*	1/2 *M12*	0.56 *14.2*	0.67 *17.0*	2.62 *66.5*	2.38 *60.5*	2.02 *51.3*
209	1-5/8 1-11/16 1-3/4 *45mm*	6.0 6.0 5.9 *2.7*	1.85 *47.0*	5.38 *136.7*	2.03 *51.6*	4.13 *104.8*	1/2 *M12*	0.63 *16.0*	0.66 *16.8*	2.86 *72.6*	2.75 *69.9*	2.06 *52.3*
210	1-15/16 2 *50mm*	6.6 6.5 *3.1*	1.86 *47.2*	5.63 *143.0*	2.07 *52.6*	4.38 *111.1*	1/2 *M12*	0.63 *16.0*	0.63 *16.0*	3.13 *79.5*	2.88 *73.2*	2.10 *53.3*
211	2 2-3/16 2-1/4 *55mm*	10.1 9.7 9.6 *5.0*	1.93 *49.0*	6.50 *165.1*	2.19 *55.6*	5.13 *130.2*	5/8 *M16*	0.69 *17.5*	0.65 *16.5*	3.43 *87.1*	3.25 *82.6*	2.25 *57.2*
212	2-1/4 2-7/16 *60mm*	11.9 11.2 *5.9*	2.12 *53.8*	6.88 *174.8*	2.36 *59.9*	5.63 *142.9*	5/8 *M16*	0.69 *17.5*	0.71 *18.0*	3.69 *93.7*	3.50 *88.9*	2.43 *61.7*
214	2-1/2 2-11/16 *70mm*	15.9 15.4 *6.6*	2.39 *60.7*	7.38 *187.5*	2.85 *72.4*	5.88 *149.2*	5/8 *M16*	0.69 *17.5*	0.70 *17.8*	4.00 *101.6*	3.69 *93.7*	2.89 *73.4*
215	2-15/16 3 *75mm*	16.4 16.2 *8.6*	2.46 *62.5*	7.75 *196.9*	3.02 *76.7*	6.00 *152.4*	3/4 *M18*	1.00 *25.4*	0.77 *19.6*	4.44 *112.8*	3.88 *98.6*	3.02 *76.7*

#C dimension will vary slightly depending on true shaft diameter.

FEATURES/BENEFITS PAGE B5-2	HOW TO ORDER/NOMENCLATURE PAGE B5-4	SELECTION PAGE B5-5	RELATED PRODUCTS PAGE B5-70