3D PDF DATASHEET



eCATALOGsolutions

Create Your Individual 3D PDF Datasheet

Learn How to Create Your Mechanical Product Catalog



BIMcatalogs.net

Learn How to Create Your BIM Product Catalog



PARTsolutions

Reduce Your Costs in Engineering and Purchasing

129665

GTAH Air Handling Normal Duty 4 Bolt Flange Bearings

BALDOR · DODGE

3D View

To activate the interactive 3D view, you must trust this document (see hint on the top) in Adobe Acrobat and click on the question mark.

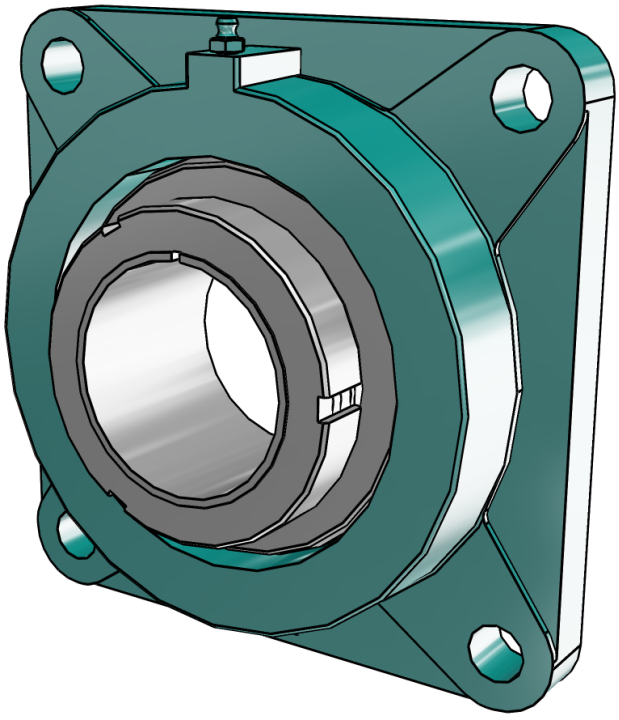

Zoom

Moves you toward or away from objects in the scene when you drag vertically. You can also zoom with the hand tool by holding down Shift as you drag.

Pan

Moves the model vertically and horizontally only. You can also pan with the hand tool: Ctrl-drag.

Rotate

Turns 3D objects around relative to the screen. How the objects move depends on the starting view, where you start dragging and the direction in which you drag.

3D PDF DATASHEET



eCATALOGsolutions

Create Your Individual 3D PDF Datasheet

Learn How to Create Your Mechanical Product Catalog



BIMcatalogs.net

Learn How to Create Your BIM Product Catalog



PARTsolutions

Reduce Your Costs in Engineering and Purchasing

129665

GTAH Air Handling Normal Duty 4 Bolt Flange Bearings

BALDOR · DODGE

2D Derivation

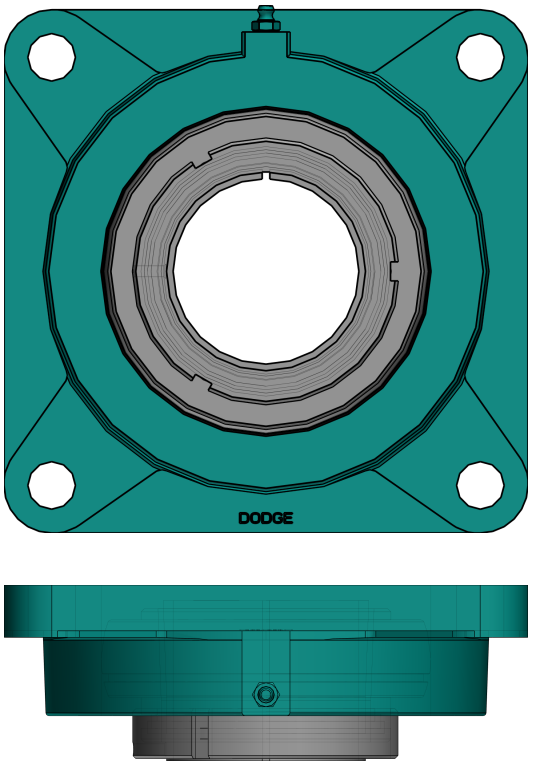

ISO View

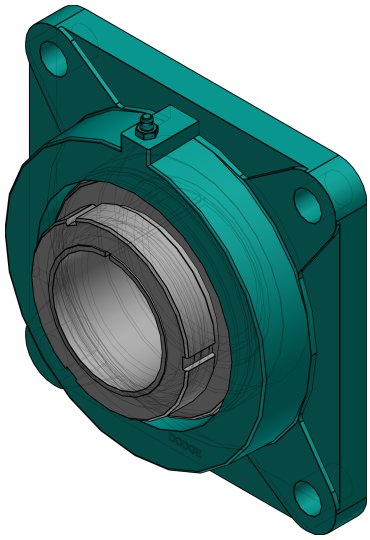

3D PDF DATASHEET



eCATALOGsolutions



BIMcatalogs.net



PARTsolutions

Create Your Individual 3D PDF Datasheet

Learn How to Create Your Mechanical Product Catalog

Learn How to Create Your BIM Product Catalog

Reduce Your Costs in Engineering and Purchasing

129665

GTAH Air Handling Normal Duty 4 Bolt Flange Bearings

BALDOR · DODGE

Technical Drawings

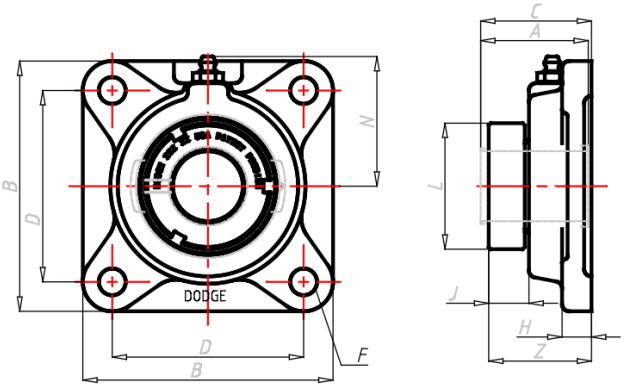

NOTES:

GREASE USED:
EXXON UNIREX N2

SEAL TYPE:
DUALGUARD LIP SEAL
W/ RUBBERIZED FLINGER

3D PDF DATASHEET



eCATALOGsolutions



BIMcatalogs.net



PARTsolutions

Create Your Individual 3D PDF Datasheet

Learn How to Create Your Mechanical Product Catalog

Learn How to Create Your BIM Product Catalog

Reduce Your Costs in Engineering and Purchasing

129665

GTAH Air Handling Normal Duty 4 Bolt Flange Bearings

BALDOR · DODGE

Technical Data

SERIES (Series)	212
SS (Shaft Size / INCH)	2-7/16
PN (Part No.)	129665
DESCRIPTION (Description)	F4B-GTAH-207
A (A / INCH)	2-7/64
B (B / INCH)	6-7/8
C (C / INCH)	2-5/16
D (D / INCH)	5-5/8
F (Bolt Diameter / INCH)	5/8
H (H / INCH)	11/16
J (J / INCH)	9/16
L (L / INCH)	3-1/2
N (N / INCH)	3-1/2
Z (Z / INCH)	2-9/32

3D PDF DATASHEET



eCATALOGsolutions



BIMcatalogs.net



PARTsolutions

Create Your Individual 3D PDF Datasheet

Learn How to Create Your Mechanical Product Catalog

Learn How to Create Your BIM Product Catalog

Reduce Your Costs in Engineering and Purchasing

129665

GTAH Air Handling Normal Duty 4 Bolt Flange Bearings

BALDOR · DODGE

Bill of Materials

N°	Name	Description	Amount
1	assembly	129665	1
1.1	body	129483	1
1.2	GTAGTMA_LNA_I	129921	1
1.3	INS_GT_I	129525	1