Eccentric Collar Ball Bearings

SXR NORMAL DUTY 2–BOLT PILOTED FLANGE BEARINGS

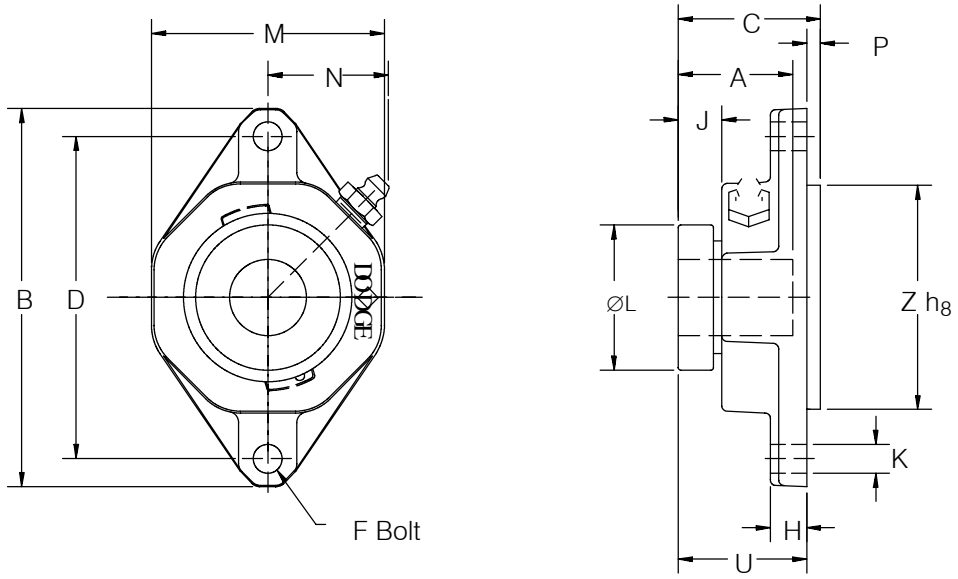

Series	Shaft Size	Part Number	Description
204	3/4	@	F2BZ–SXR–012
	20mm	***130831***	*F2BZ–SXR–20M*
205	7/8	@	F2BZ–SXR–014
	15/16	@	F2BZ–SXR–015
	1	@	F2BZ–SXR–100
	25mm	***130832***	*F2BZ–SXR–25M*
206	1–1/8	@	F2BZ–SXR–102
	1–3/16	@	F2BZ–SXR–103
	1–1/4	@	F2BZ–SXR–104S
	30mm	***130833***	*F2BZ–SXR–30M*
207	1–1/4	@	F2BZ–SXR–104
	1–3/8	@	F2BZ–SXR–106
	1–7/16	@	F2BZ–SXR–107
	35mm	***130834***	*F2BZ–SXR–35M*
208	1–1/2	@	F2BZ–SXR–108
	40mm	***130835***	*F2BZ–SXR–40M*
209	1–5/8	@	F2BZ–SXR–110L
	1–11/16	@	F2BZ–SXR–111
	1–3/4	@	F2BZ–SXR–112
	45mm	***130836***	*F2BZ–SXR–45M*
210	1–15/16	@	F2BZ–SXR–115
	2	@	F2BZ–SXR–200
	50mm	***130837***	*F2BZ–SXR–50M*

@Assembled to order

FEATURE/BENEFITS ECCENTRIC COLLAR BALL BRGS PAGE B3–2	HOW TO ORDER/ NOMENCLATURE PAGE B3–4	SELECTION PAGE B3–5	DIMENSIONS SXV INSERTS PAGE B3–70

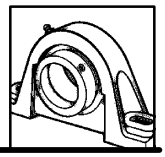

Eccentric Collar Ball Bearings

SXR NORMAL DUTY 2–BOLT PILOTED FLANGE BEARINGS

Series	Shaft Size	Weight lbs kg	A	B	C	D	F Bolt Dia.	H
204	3/4 *20mm*	1.3 *0.6*	1–23/32 *43.7*	4–27/64 *112.3*	1–51/64 *45.6*	3–17/32 *89.7*	3/8 *M10*	13/32 *10.3*
205	7/8 15/16 1 *25mm*	1.6 *0.7*	1–3/4 *44.5*	4–7/8 *123.8*	1–51/64 *45.6*	3–57/64 *98.8*	7/16 *M10*	15/32 *11.9*
206	1–1/8 1–3/16 1–1/4 *30mm*	2.1 *0.9*	1–29/32 *48.4*	5–9/16 *141.3*	1–29/32 *48.4*	4–19/32 *116.7*	7/16 *M10*	17/32 *13.5*
207	1–1/4 1–3/8 1–7/16 *35mm*	3.1 *1.3*	2–1/64 *51.2*	6–1/8 *155.6*	2–1/8 *53.8*	5–1/8 *130.2*	1/2 *M12*	35/64 *13.9*
208	1–1/2 *40mm*	4.3 *1.9*	2–7/32 *56.4*	6–3/4 *171.5*	2–21/64 *59.1*	5–21/32 *143.7*	1/2 *M12*	17/32 *13.5*
209	1–5/8 1–11/16 1–3/4 *45mm*	4.7 *2.0*	2–7/32 *56.4*	7–1/16 *179.4*	2–21/64 *59.1*	5–27/32 *148.4*	9/16 *M12*	9/16 *14.3*
210	1–15/16 2 *50mm*	5.2 *2.1*	2–15/32 *62.7*	7–7/16 *188.9*	3–13/32 *86.5*	6–3/16 *157.2*	9/16 *M16*	35/64 *13.9*

Series	Shaft Size	J	K	L	M	N	P	U	Z_{H8}
204	3/4 *20mm*	41/64 *16.3*	27/64 *10.7*	1–5/16 *33.3*	2–3/8 *60.3*	1–3/8 *34.9*	0.1378 *3.5*	1.6591 *42.1*	2.1654 *55.0*
205	7/8 15/16 1 *25mm*	21/32 *16.7*	29/64 *11.5*	1–1/2 *38.1*	2–3/4 *69.9*	1–9/16 *39.7*	0.1378 *3.5*	1.6591 *42.1*	2.3622 *60.0*
206	1–1/8 1–3/16 1–1/4 *30mm*	43/64 *17.1*	29/64 *11.5*	1–3/4 *44.5*	3–1/4 *82.6*	1–3/4 *44.5*	0.1181 *3.0*	1.7882 *45.4*	3.1496 *80.0*
207	1–1/4 1–3/8 1–7/16 *35mm*	25/32 *19.7*	33/64 *13.1*	2–1/8 *54.0*	3–3/4 *95.3*	1–57/64 *48.0*	0.1575 *4.0*	1.9603 *49.8*	3.5433 *90.0*
208	1–1/2 *40mm*	25/32 *19.8*	33/64 *13.1*	2–3/8 *60.3*	4–1/8 *104.8*	1–7/8 *47.6*	0.1575 *4.0*	2.1706 *55.1*	3.9370 *100.0*
209	1–5/8 1–11/16 1–3/4 *45mm*	25/32 *19.8*	33/64 *13.1*	2–1/2 *63.5*	4–3/8 *111.1*	1–31/32 *50.0*	0.1575 *4.0*	2.1706 *55.1*	4.1339 *105.0*
210	1–15/16 2 *50mm*	27/32 *21.4*	43/64 *17.1*	2–3/4 *69.9*	4–9/16 *115.9*	2–1/32 *51.6*	0.1575 *4.0*	3.2488 *82.5*	4.1339 *105.0*

FEATURE/BENEFITS ECCENTRIC COLLAR BALL BRGS PAGE B3–2	HOW TO ORDER/ NOMENCLATURE PAGE B3–4	SELECTION PAGE B3–5	DIMENSIONS SXV INSERTS PAGE B3–70