Eccentric Collar Ball Bearings

SXRB NORMAL DUTY PILLOW BLOCKS

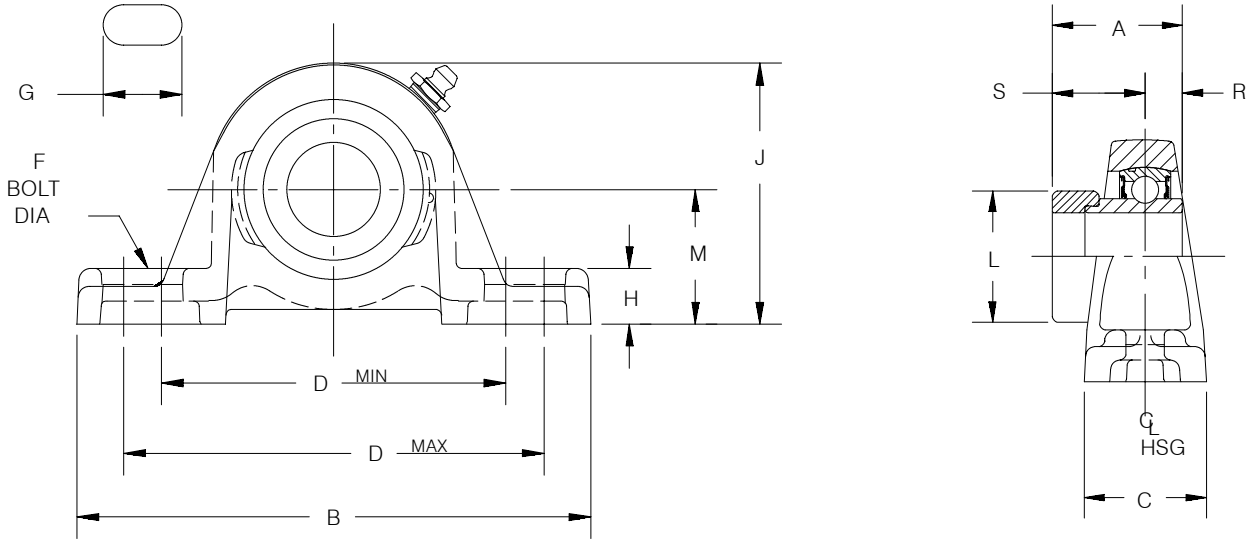

Series	Shaft Size	Part Number	Description
203 (SXR)	1/2	**131800**	P2B-SXR-008
	5/8	**131801**	P2B-SXR-010
204	3/4	**131830**	P2B-SXRB-012
205	7/8	**131831**	P2B-SXRB-014
	15/16	**131832**	P2B-SXRB-015
	1	**131833**	P2B-SXRB-100
206	1-1/16	**131834**	P2B-SXRB-101
	1-1/8	**131835**	P2B-SXRB-102
	1-3/16	**131836**	P2B-SXRB-103
	1–1/4	**@**	P2B–SXRB–104S
207	1-1/4	**131837**	P2B-SXRB-104
	1-5/16	**131838**	P2B-SXRB-105
	1-3/8	**131839**	P2B-SXRB-106
	1-7/16	**131840**	P2B-SXRB-107

@ Assembled to order

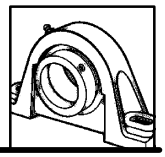

Eccentric Collar Ball Bearings

SXRB NORMAL DUTY PILLOW BLOCKS

Series	Shaft Size	Weight lbs.	A	B	C	D		F Bolt Dia.
						Min.	Max.	
203 (SXR)	1/2 5/8	1.2 1.0	1-1/8	5	1-7/32	3-1/4	4-1/16	3/8
204	3/4	1.5	1-23/32	5-1/4	1-11/32	3-3/8	4-3/16	3/8
205	7/8 15/16 1	1.8 1.7 1.6	1-3/4	5-1/2	1-13/32	4–1/4	4-1/2	3/8
206	1-1/16 1-1/8 1-3/16 1–1/4	2.7 2.6 2.5 2.4	1-29/32	6-1/4	1-3/4	4-1/4	5	1/2
207	1-1/4 1-5/16 1-3/8 1-7/16	4.4 4.3 4.2 4.1	2-1/64	6-1/2	1-3/4	4-11/16	5-7/16	1/2

Series	Shaft Size	G	H	J	L	M	R	S
203 (SXR)	1/2 5/8	27/32	15/32	2-5/32	1-1/8	1-1/16	0.256	0.869
204	3/4	27/32	15/32	2-1/2	1-5/16	1-1/4	43/64	1-3/64
205	7/8 15/16 1	27/32	15/32	2-21/32	1-1/2	1-5/16	11/16	1-1/16
206	1-1/16 1-1/8 1-3/16 1–1/4	15/16	5/8	3-3/16	1-3/4	1-9/16	23/32	1-3/16
207	1-1/4 1-5/16 1-3/8 1-7/16	15/16	21/32	3-11/16	2–1/8	1-13/16	0.742	1.274

DIMENSIONS SXR INSERTS PAGE B3–70 | MODIFICATIONS PAGE B3–74 | RELATED PRODUCTS PAGE B3–75

Eccentric Collar Ball Bearings

SXRB NORMAL DUTY PILLOW BLOCKS

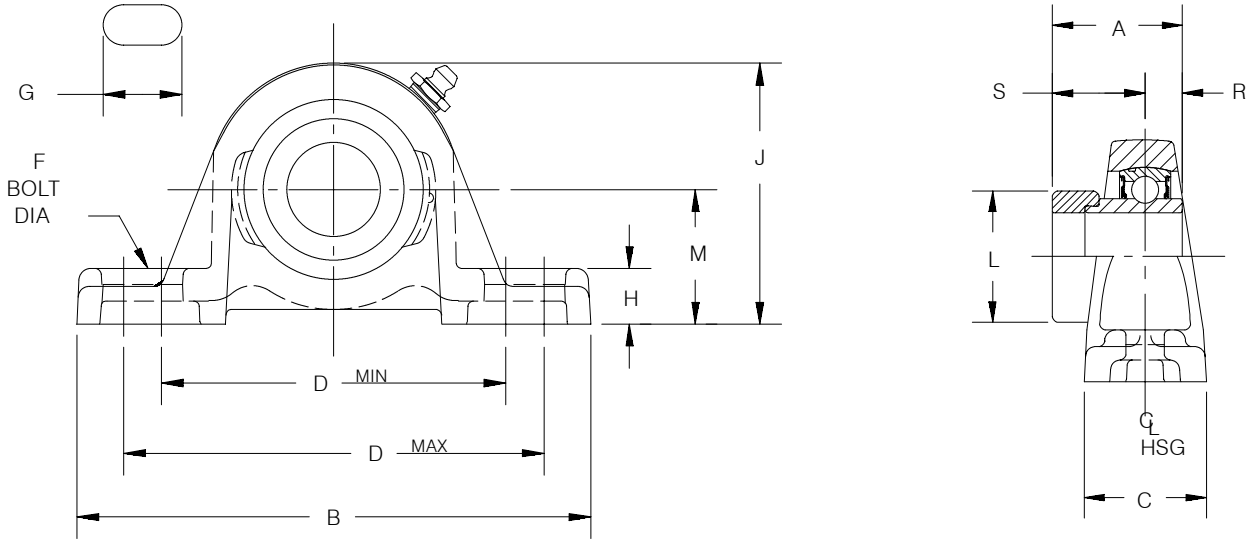

Series	Shaft Size	Part Number	Description
208	1-1/2 *40mm*	**131841** ***125660***	P2B-SXRB-108 *P2B–SXRB–40M*
209	1-5/8 1-11/16 1-3/4	**131842** **131843** **131844**	P2B-SXRB-110 P2B-SXRB-111 P2B-SXRB-112
210	1-15/16 2	**131845** **131846**	P2B-SXRB-115 P2B-SXRB-200
211	2 2-3/16	**131340** **131847**	P2B-SXRB-200L P2B-SXRB-203
212	2-1/4 2-7/16	**131848** **131849**	P2B-SXRB-204 P2B-SXRB-207
215	2-15/16	**131434**	P2B-SXRB-215

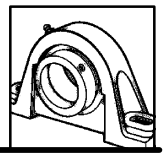

Eccentric Collar Ball Bearings

SXRB NORMAL DUTY PILLOW BLOCKS

Series	Shaft Size	Weight lbs *gm*	A	B	C	D		F Bolt Dia.
						Min.	Max.	
208	1-1/2 *40mm*	5.0 *2.2*	2-7/32 *56.4*	7-1/4 *184.2*	1-15/16 *49.2*	5-3/16 *131.8*	5-7/8 *149.2*	1/2 M*12*
209	1-5/8 1-11/16 1-3/4	6.4 6.3 6.2	2-7/32	7-7/16	2	5-1/2	6-3/16	5/8
210	1-15/16 2	7.2 7.0	2-15/32	8-1/8	2-1/4	6	6-11/16	5/8
211	2 2-3/16	9.5 9.0	2-13/16	8-7/8	2-5/16	6-3/8	7-7/16	5/8
212	2-1/4 2-7/16	11.4 10.4	3-1/16	9-1/2	2-3/8	6-7/8	7-15/16	5/8
215	2-15/16	21.0	6-5/8	10-3/4	2-11/16	7-1/2	8-1/2	3/4

Series	Shaft Size	G	H	J	L	M	R	S
208	1-1/2 *40mm*	29/32 *23.0*	3/4 *19.1*	4 *101.6*	2-3/8 *60.3*	1-15/16 *49.2*	27/32 *21.4*	1-3/8 *34.9*
209	1-5/8 1-11/16 1-3/4	29/32	11/16	4-7/32	2-1/2	2-1/16	27/32	1-3/8
210	1-15/16 2	1-1/32	11/16	4-15/32	2-3/4	2-3/16	31/32	1-1/2
211	2 2-3/16	1-7/32	13/16	4-29/32	3	2-7/16	1-3/32	1-23/32
212	2-1/4 2-7/16	1-7/32	13/16	5-11/32	3-5/16	2-11/16	1-7/32	1-27/32
215	2-15/16	1-7/16	1-1/16	6-9/16	4	3-5/16	4-15/32	2-5/32

DIMENSIONS
SXR INSERTS
PAGE B3–70

MODIFICATIONS
PAGE B3–74

RELATED PRODUCTS
PAGE B3–75