3D PDF DATASHEET



eCATALOGsolutions

Create Your Individual 3D PDF Datasheet

Learn How to Create Your Mechanical Product Catalog



BIMcatalogs.net

Learn How to Create Your BIM Product Catalog



PARTsolutions

Reduce Your Costs in Engineering and Purchasing

CAD ENAS

# 134229

## SLEEVOIL

BALDOR·DODGE

## 3D View

To activate the interactive 3D view, you must trust this document (see hint on the top) in Adobe Acrobat and click on the question mark.

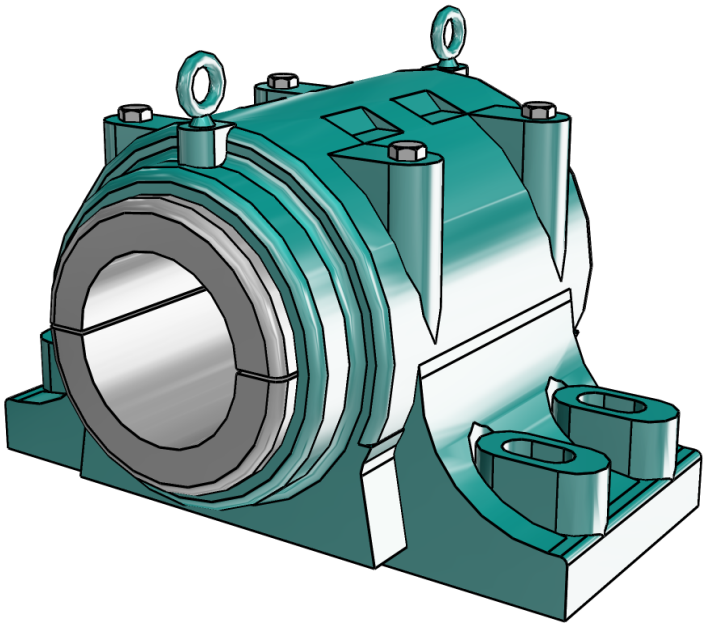

### Zoom

Moves you toward or away from objects in the scene when you drag vertically. You can also zoom with the hand tool by holding down Shift as you drag.

### Pan

Moves the model vertically and horizontally only. You can also pan with the hand tool: Ctrl-drag.

### Rotate

Turns 3D objects around relative to the screen. How the objects move depends on the starting view, where you start dragging and the direction in which you drag.

3D PDF DATASHEET



eCATALOGsolutions

Create Your Individual 3D PDF Datasheet

Learn How to Create Your Mechanical Product Catalog



BIMcatalogs.net

Learn How to Create Your BIM Product Catalog



PARTsolutions

Reduce Your Costs in Engineering and Purchasing

CAD ENAS

# 134229

SLEEVOIL

BALDOR · DODGE

## 2D Derivation

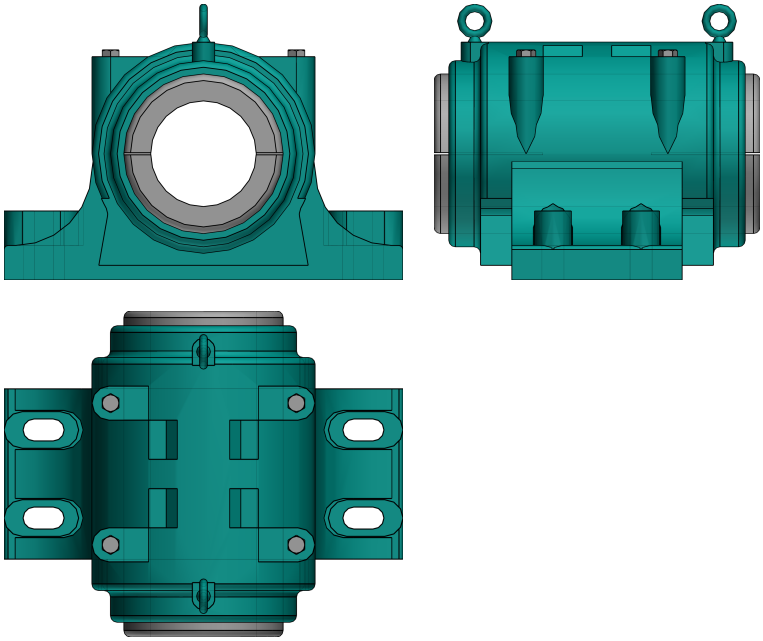

## ISO View

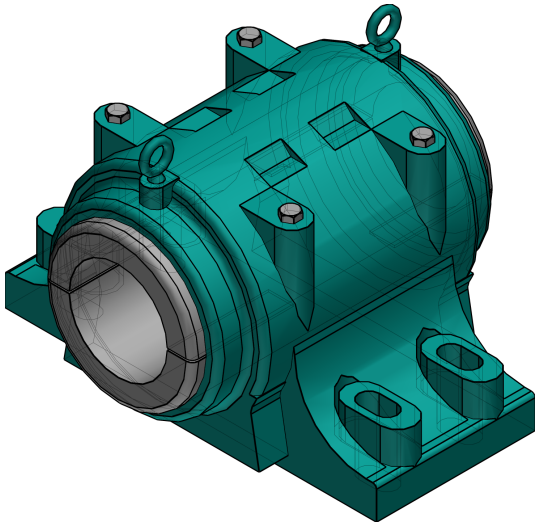

3D PDF DATASHEET



eCATALOGsolutions



BIMcatalogs.net



PARTsolutions

Create Your Individual 3D PDF Datasheet

Learn How to Create Your Mechanical Product Catalog

Learn How to Create Your BIM Product Catalog

Reduce Your Costs in Engineering and Purchasing

# 134229

SLEEVOIL

BALDOR · DODGE

## Technical Drawings

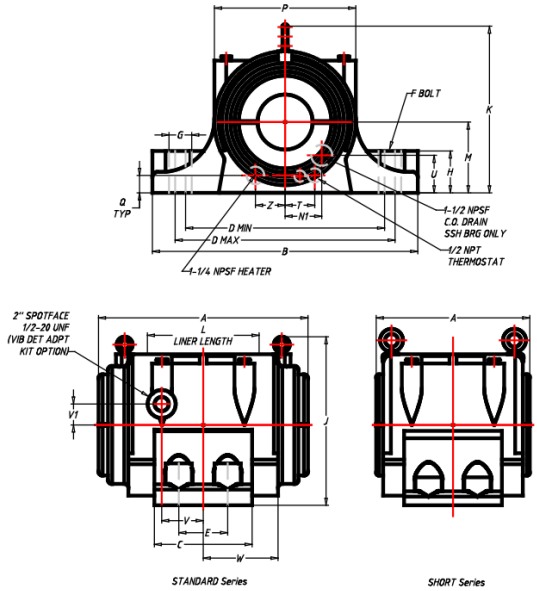

3D PDF DATASHEET



eCATALOGsolutions



BIMcatalogs.net



PARTsolutions

Create Your Individual 3D PDF Datasheet

Learn How to Create Your Mechanical Product Catalog

Learn How to Create Your BIM Product Catalog

Reduce Your Costs in Engineering and Purchasing

# 134229

SLEEVOIL

BALDOR · DODGE

## Technical Data

| | |
|---|---|
| SS (Shaft Size / INCH) | 9 |
| TYPE (Expansion Type) | STL Non - Expansion Pillow Blocks |
| PN (Part Number) | 134229 |
| WEIGHT (Weight / lbs) | 1339 |
| SCPN (Split Thrust Collar Part Number) | 133959 |
| SCWT (Split Thrust Collar Weight / lbs) | 54 |
| A (A / INCH) | 27-3/4 |
| B (B / INCH) | 34 |
| C (C / INCH) | 14-1/2 |
| DMIN (DMIN / INCH) | 25-5/8 |
| DMAX (DMAX / INCH) | 28-7/8 |
| E (E / INCH) | 7-1/2 |
| F (Bolt Diameter / INCH) | 1-3/4 |
| G (G / INCH) | 3-1/2 |
| H (H / INCH) | 5-7/8 |
| J (J / INCH) | 22-3/8 |
| K (K / INCH) | 22-1/2 |
| L (L / INCH) | 16 |
| M (M / INCH) | 10-3/4 |
| N (N STL / INCH) | 11 |
| N1 (N1 SSL / INCH) | 5-1/2 |
| P (P / INCH) | 19 |
| S (S / INCH) | 3 |
| T (T / INCH) | 5-1/4 |
| U (U / INCH) | 3-3/8 |
| U1 (U1 STL / INCH) | 1-1/4 |
| V (V / INCH) | 5 |
| V1 ( / INCH) | 1-1/2 |
| W (W / INCH) | 9-5/8 |
| Z (Z / INCH) | 5-1/4 |
| B1 (B1 / INCH) | 12 |
| TC (Thrust Collars Diameter X Width / INCH) | 12-1/2*3-3/16 |
| O (Oil (Fl.oz.) / INCH) | 320 |

3D PDF DATASHEET



eCATALOGsolutions



BIMcatalogs.net



PARTsolutions

Create Your Individual 3D PDF Datasheet

Learn How to Create Your Mechanical Product Catalog

Learn How to Create Your BIM Product Catalog

Reduce Your Costs in Engineering and Purchasing

# 134229

SLEEVOIL

BALDOR · DODGE

## Bill of Materials

| N° | Name | Description | Amount |
|---|---|---|---|
| 1 | assembly | 134229 | 1 |
| 1.1 | plsr_body | 134229B | 1 |
| 1.2 | plsr_insert | 134229I | 1 |