3D PDF DATASHEET



eCATALOGsolutions

Create Your Individual 3D PDF Datasheet

Learn How to Create Your Mechanical Product Catalog



BIMcatalogs.net

Learn How to Create Your BIM Product Catalog



PARTsolutions

Reduce Your Costs in Engineering and Purchasing

# 136171

## GT Wide Slot Take-Up Bearings -(Medium Duty)

BALDOR · DODGE

## 3D View

To activate the interactive 3D view, you must trust this document (see hint on the top) in Adobe Acrobat and click on the question mark.

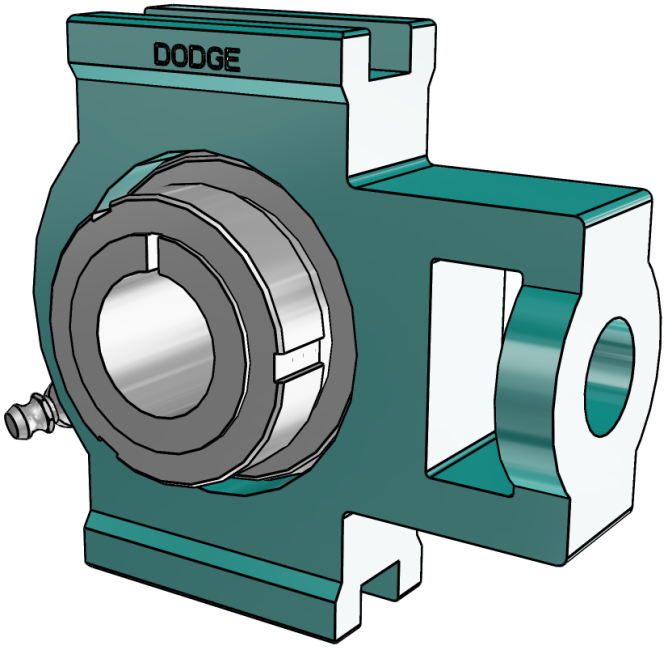


### Zoom

Moves you toward or away from objects in the scene when you drag vertically. You can also zoom with the hand tool by holding down Shift as you drag.

### Pan

Moves the model vertically and horizontally only. You can also pan with the hand tool: Ctrl-drag.

### Rotate

Turns 3D objects around relative to the screen. How the objects move depends on the starting view, where you start dragging and the direction in which you drag.

3D PDF DATASHEET



eCATALOGsolutions



BIMcatalogs.net



PARTsolutions

Create Your Individual 3D PDF Datasheet

Learn How to Create Your Mechanical Product Catalog

Learn How to Create Your BIM Product Catalog

Reduce Your Costs in Engineering and Purchasing

# 136171

## GT Wide Slot Take-Up Bearings -(Medium Duty)

BALDOR · DODGE

### 2D Derivation

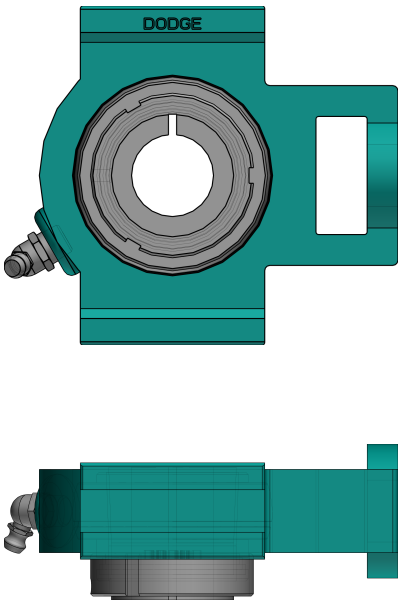


### ISO View

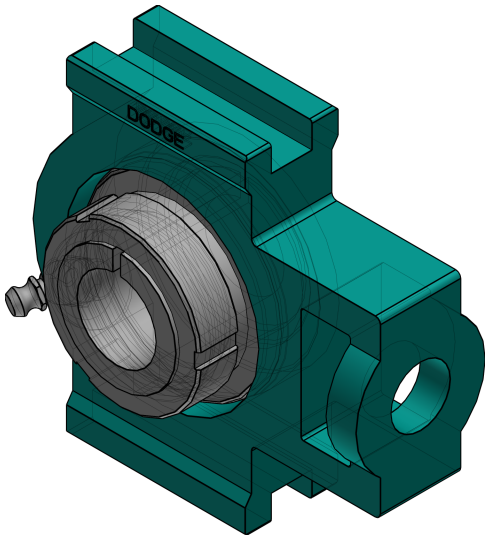

3D PDF DATASHEET



eCATALOGsolutions



BIMcatalogs.net



PARTsolutions

Create Your Individual 3D PDF Datasheet

Learn How to Create Your Mechanical Product Catalog

Learn How to Create Your BIM Product Catalog

Reduce Your Costs in Engineering and Purchasing

# 136171

## GT Wide Slot Take-Up Bearings -(Medium Duty)

BALDOR·DODGE

## Technical Drawings

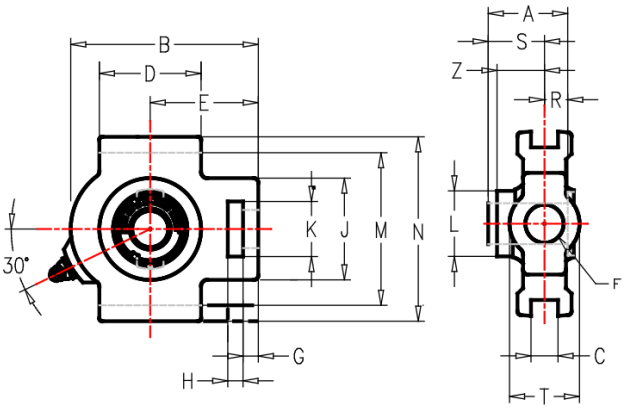


NOTES:

GREASE USED:
EXXON UNIREX N2

SEAL TYPE:
DUALGUARD LIP SEAL
W/ RUBBERIZED FLINGER

3D PDF DATASHEET



eCATALOGsolutions



BIMcatalogs.net



PARTsolutions

Create Your Individual 3D PDF Datasheet

Learn How to Create Your Mechanical Product Catalog

Learn How to Create Your BIM Product Catalog

Reduce Your Costs in Engineering and Purchasing

# 136171

## GT Wide Slot Take-Up Bearings -(Medium Duty)

BALDOR·DODGE

## Technical Data

| | |
|---|---|
| SERIES (Series) | 206 |
| SS (Shaft Size / INCH) | 1 |
| PN (Part No.) | 136171 |
| DESCRIPTION (Description) | WSTU-GTM-100 |
| A (A / INCH) | 1-39/64 |
| B (B / INCH) | 4-3/8 |
| C (C / INCH) | 0.516/0.546 |
| D (D / INCH) | 2-1/4 |
| E (E / INCH) | 2-3/4 |
| F (Screw Diameter / INCH) | 3/4 |
| G (G / INCH) | 3/8 |
| H (H / INCH) | 5/8 |
| J (J / INCH) | 2-3/16 |
| K (K / INCH) | 1-7/16 |
| L (L / INCH) | 2 |
| M (M / INCH) | 3.480/3.510 |
| N (N / INCH) | 4-1/8 |
| R (R / INCH) | 17/32 |
| S (S / INCH) | 1-5/64 |
| T (T / INCH) | 1-5/8 |
| Z (Z / INCH) | 1-1/32 |

3D PDF DATASHEET



eCATALOGsolutions



BIMcatalogs.net



PARTsolutions

Create Your Individual 3D PDF Datasheet

Learn How to Create Your Mechanical Product Catalog

Learn How to Create Your BIM Product Catalog

Reduce Your Costs in Engineering and Purchasing

# 136171

## GT Wide Slot Take-Up Bearings -(Medium Duty)

BALDOR·DODGE

## Bill of Materials

| N° | Name | Description | Amount |
|---|---|---|---|
| 1 | assembly | 136171 | 1 |
| 1.1 | bodi | WSTU-GTU-06 | 1 |
| 1.2 | GTAGTMA_LNA_I | 129925 | 1 |
| 1.3 | INS_GTI | 129519 | 1 |
| 1.4 | GF405016 | 405016 | 1 |