3D PDF DATASHEET



eCATALOGsolutions

Create Your Individual 3D PDF Datasheet

Learn How to Create Your Mechanical Product Catalog



BIMcatalogs.net

Learn How to Create Your BIM Product Catalog



PARTsolutions

Reduce Your Costs in Engineering and Purchasing

CAD ENAS

136296

GTM Normal Duty Narrow Slot Take-Up Bearings

BALDOR · DODGE

3D View

To activate the interactive 3D view, you must trust this document (see hint on the top) in Adobe Acrobat and click on the question mark.

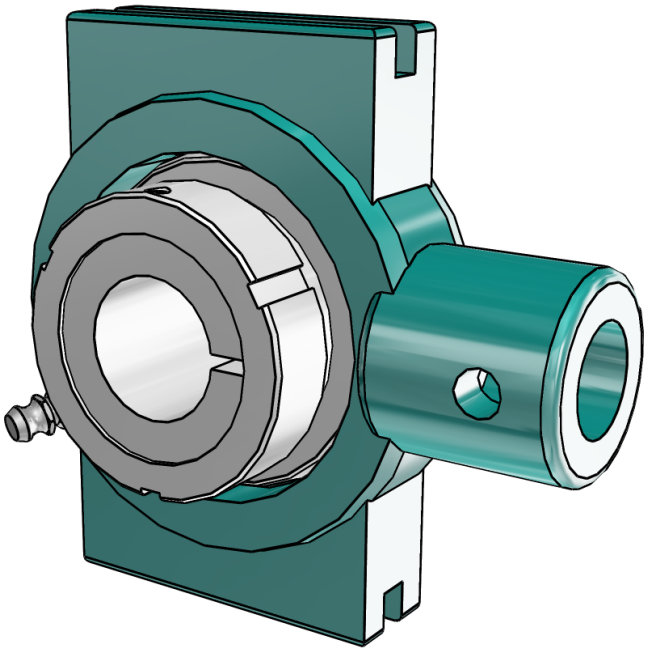

Zoom

Moves you toward or away from objects in the scene when you drag vertically. You can also zoom with the hand tool by holding down Shift as you drag.

Pan

Moves the model vertically and horizontally only. You can also pan with the hand tool: Ctrl-drag.

Rotate

Turns 3D objects around relative to the screen. How the objects move depends on the starting view, where you start dragging and the direction in which you drag.

3D PDF DATASHEET



eCATALOGsolutions



BIMcatalogs.net



PARTsolutions

Create Your Individual 3D PDF Datasheet

Learn How to Create Your Mechanical Product Catalog

Learn How to Create Your BIM Product Catalog

Reduce Your Costs in Engineering and Purchasing

136296

GTM Normal Duty Narrow Slot Take-Up Bearings

BALDOR · DODGE

2D Derivation

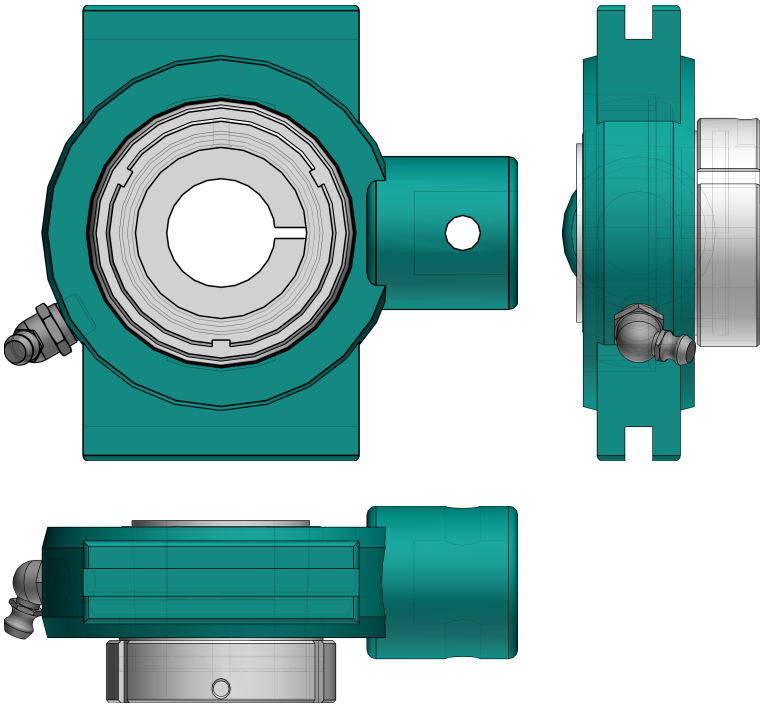

ISO View

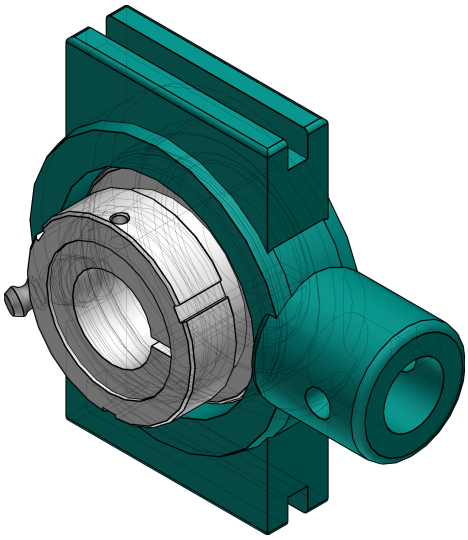

3D PDF DATASHEET



eCATALOGsolutions



BIMcatalogs.net



PARTsolutions

Create Your Individual 3D PDF Datasheet

Learn How to Create Your Mechanical Product Catalog

Learn How to Create Your BIM Product Catalog

Reduce Your Costs in Engineering and Purchasing

136296

GTM Normal Duty Narrow Slot Take-Up Bearings

BALDOR·DODGE

Technical Drawings

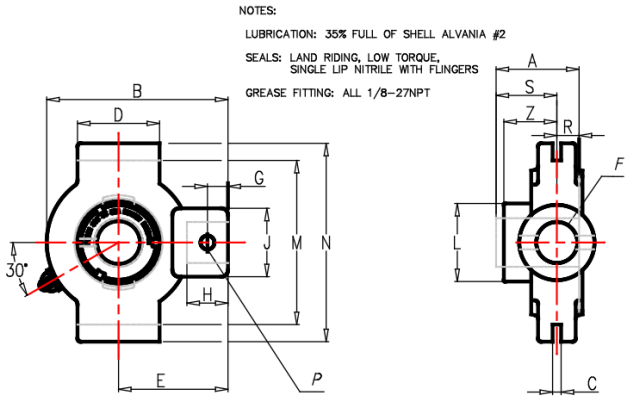

NOTES:

GREASE USED:
EXXON UNIREX N2

SEAL TYPE:
DUALGUARD LIP SEAL
W/ RUBBERIZED FLINGER

3D PDF DATASHEET



eCATALOGsolutions



BIMcatalogs.net



PARTsolutions

Create Your Individual 3D PDF Datasheet

Learn How to Create Your Mechanical Product Catalog

Learn How to Create Your BIM Product Catalog

Reduce Your Costs in Engineering and Purchasing

136296

GTM Normal Duty Narrow Slot Take-Up Bearings

BALDOR·DODGE

Technical Data

SERIES (Series)	206
SS (Shaft Size)	25
PN (Part No.)	136296
DESCRIPTION (Description)	NSTU-GTM-25M
PNSL (Part No. of Unit without Adapter Sleeve & Lock Nut)	136212
DESCRIPTIONSL (Description of Unit without Adapter Sleeve & Lock Nut)	NSTU-GTU-06
PNA (Part No. of Adapter Sleeve & Lock Nut)	136561
DESCRIPTIONA (Description of Adapter Sleeve & Lock Nut)	AN-GTM-06-25M-D
W (Weight / kg)	1.2
TUFS (Take-up Frame Size)	NS308
A (A / mm)	40.9
B (B / mm)	109.5
C (C / mm)	6.35
D (D / mm)	63.5
E (E / mm)	68.3
F (F / mm)	19.1
G (G / mm)	12.7
H (H / mm)	23.9
J (J / mm)	35.1
L (L / mm)	52.8
M (M / mm)	89.15/88.39
N (N / mm)	104.9
P (P / mm)	8.1
R (R / mm)	13.2
S (S / mm)	27.7
Z (Z / mm)	28.7
CAPS (Capacity Static / lbs)	2250
CAPD (Capacity Dynamic / lbs)	4368

3D PDF DATASHEET



eCATALOGsolutions



BIMcatalogs.net



PARTsolutions

Create Your Individual 3D PDF Datasheet

Learn How to Create Your Mechanical Product Catalog

Learn How to Create Your BIM Product Catalog

Reduce Your Costs in Engineering and Purchasing

136296

GTM Normal Duty Narrow Slot Take-Up Bearings

BALDOR · DODGE

Bill of Materials

N°	Name	Description	Amount
1	assembly	136296	1
1.1	body	136296I	1
1.2	GF405016	405016	1