SELECTION/DIMENSIONS

ULTRA KLEEN Mounted Bearings
SCEZ PSS NORMAL DUTY POLYMER HOUSED WIDE SLOT TAKE-UP BEARINGS

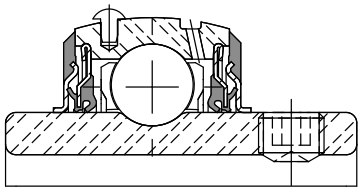

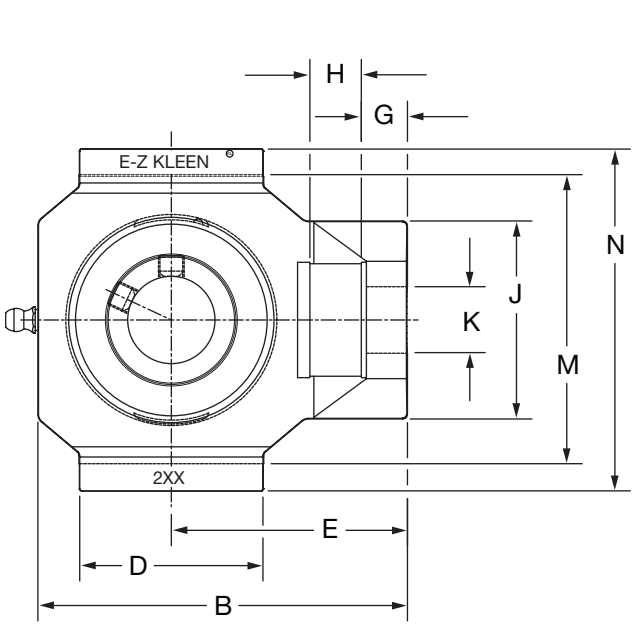

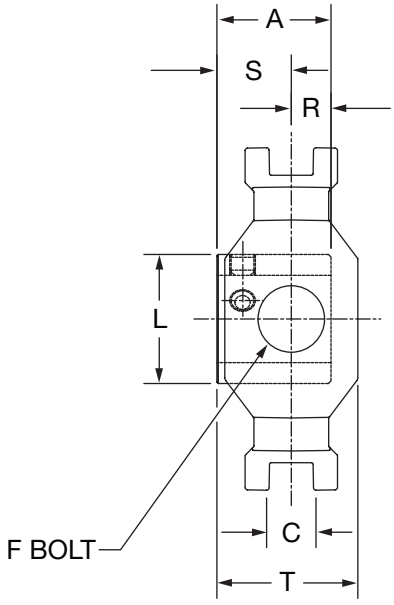

Series	Shaft Size	With Stainless Steel Insert	
		Part No.	Description
204	3/4	**136734**	WSTU-SCEZ-012-PSS
	20mm	***136769***	*WSTU-SCEZ-20M-PSS*
205	1	**136735**	WSTU-SCEZ-100-PSS
	25mm	***136770***	*WSTU-SCEZ-25M-PSS*
206	1-3/16	**136736**	WSTU-SCEZ-103-PSS
	1-1/4	***136737***	WSTU-SCEZ-104S-PSS
	30mm	***136771***	*WSTU-SCEZ-30M-PSS*
207	1-1/4	**136738**	WSTU-SCEZ-104-PSS
	1-7/16	**136739**	WSTU-SCEZ-107-PSS
	35mm	***136772***	*WSTU-SCEZ-35M-PSS*

DODGE®



ULTRA KLEEN Mounted Bearings

SCEZ PSS NORMAL DUTY POLYMER HOUSED WIDE SLOT TAKE-UP BEARINGS

Series	Shaft Size	Weight lbs kg	Take-Up Frame No. Ref.	A	B	C	D	E	F Thd Shaft	G
204	3/4	0.66	WS300	1.23	3.81	0.530	2.10	2.50	5/8	0.56
	20 mm	*0.31*		*31.2*	*96.8*	*13.46*	*53.3*	*63.5*	*15.9*	*14.2*
205	1	0.72	WS300	1.34	3.97	0.530	2.20	2.56	5/8	0.56
	25 mm	*0.34*		*34.0*	*100.8*	*13.46*	*55.9*	*65.0*	*15.9*	*14.2*
206	1-3/16			1.52	4.49	0.530	2.29	2.86	3/4	0.56
	1-1/4	1.07	WS308							
	30 mm	*0.49*		*38.6*	*114.0*	*13.46*	*58.2*	*72.6*	*19.1*	*14.2*
207	1-1/4	1.58		1.71	4.99	0.530	2.25	3.10	3/4	0.56
	1-7/16	1.42	WS308							
	35 mm	*0.69*		*43.4*	*126.7*	*13.46*	*57.2*	*78.7*	*19.1*	*14.2*

Series	Shaft Size	H	J	K	L	M	N	R	S	T
204	3/4	0.65	2.10	0.71	1.11	3.015/2.985	3.63	0.50	0.73	1.38
	20 mm	*16.5*	*53.3*	*18.0*	*28.2*	*76.58/75.82*	*92.2*	*12.7*	*18.5*	*35.1*
205	1	0.65	2.12	0.71	1.32	3.030/3.000	3.63	0.56	0.78	1.38
	25 mm	*16.5*	*53.8*	*18.0*	*33.5*	*76.96/76.20*	*92.2*	*14.2*	*19.8*	*35.1*
206	1-3/16	0.65	2.41	0.81	1.57	3.525/3.495	4.20	0.58	0.94	1.62
	1-1/4									
	30 mm	*16.5*	*61.2*	*20.6*	*39.9*	*89.54/88.77*	*106.7*	*14.7*	*23.9*	*41.1*
207	1-1/4	0.65	2.41	0.81	1.84	3.540/3.510	4.20	0.67	1.04	1.62
	1-7/16									
	35 mm	*16.5*	*61.2*	*20.6*	*46.7*	*89.93/89.15*	*106.7*	*17.0*	*26.4*	*41.1*

FEATURES/BENEFITS PAGE B1-3	HOW TO ORDER/NOMENCLATURE PAGE B1-6	EASY SELECTION PAGE B1-7	ACCESSORIES PAGE B1-35