CLED2X26NMS2



High performance ceiling mounted LED lighting with mini sensor. Bi-level option available. Flush mount fixture bracket.

Color: Bronze

Weight: 9.5 lbs

Project:	**Type:**
Prepared By:	**Date:**

Driver Info

Type	Constant Current
120V	0.48A
208V	N/A
240V	N/A
277V	N/A
Input Watts	59.1W

LED Info

Watts	52W
Color Temp	4000K (Neutral)
Color Accuracy	82 CRI
L70 Lifespan	100,000 Hours
Lumens	4,688 lm
Efficacy	79.3 lm/W

Technical Specifications

Compliance

UL Listed:
Suitable for damp locations

IESNA LM-79 & LM-80 Testing:
RAB LED luminaires and LED components have been tested by an independent laboratory in accordance with IESNA LM-79 and LM-80.

Performance

Lifespan:
100,000-Hour LED lifespan based on IES LM-80 results and TM-21 calculations

Wattage Equivalency:
Equivalent to 175W Metal Halide

Installation

Recommended Mounting Height:
8-10'

LED Characteristics

LEDs:
(4) 13W Multi-chip high output, long-life LED

Color Consistency:
3-step MacAdam Ellipse binning to achieve consistent fixture-to-fixture color

Color Stability:
LED color temperature is warrantied to shift no more than 200K in color temperature over a 5-year period

Color Uniformity:
RAB's range of Correlated Color Temperature follows the guidelines of the American National Standard for Specifications for the Chromaticity of Solid State Lighting (SSL) Products, ANSI C78.377-2017.

Color Temperature:
4000K

Construction

Cold Weather Starting:
The minimum starting temperature is -40°C (-40°F)

Ambient Temperature:
Suitable for use in up to 35°C (95°F)

Housing:
Precision die-cast aluminum housing and lens framing

Gaskets:
High-temperature silicone

Finish:
Formulated for high durability and long-lasting color

Green Technology:
Mercury and UV free. RoHS-compliant components.

Other

Patents:
RAB CLED2X26 are protected by patents in US pat. D634,879 CN ZL20103067978.

Warranty:
RAB warrants that our LED products will be free from defects in materials and workmanship for a period of five (5) years from the date of delivery to the end user, including coverage of light output, color stability, driver performance and fixture finish. RAB's warranty is subject to all terms and conditions found at rablighting.com/warranty.

Electrical

Voltage:
120V AC 60Hz

Drivers (2):
Constant Current, Class 2, 100V-277V, 50/60 Hz, 6kv Surge Protection, 720mA, 100-277VAC 0.8 Amps, THD less than equal to 20%, Power Factor 99.2%.

Sensor Settings

Sensor Switching Capacity:
5 Amps, 450W LED @ 120 Volts 0.8pF Driver; 5 Amps, 300W LED @ 120 Volts 0.5pF Driver.

Copyright © 2025 RAB Lighting All Rights Reserved Note: Specifications are subject to change at any time without notice

Technical Specifications (continued)

Sensor Time Adjustment:
5 seconds to 15 minutes

Sensor Quick Test Time:
5 second test time for fast installation. Works day or night.

Sensor "No Hands" Auto Testing:
Auto mode starts after 4 minutes of testing. No adjustment needed.

Sensor Photoelectric Control:
Deactivates lights during daylight. Fully adjustable for 24 hour operation or custom applications.

Sensor LED Detection Indicator:
LED glows red day & night for "on guard" deterrence

Sensor RF Immunity:
Circuits fully shielded for maximum radio frequency immunity

Sensor Ratings:
5 amps

Sensor Power Consumption:
Negligible

Sensor Manual Switch:
None

Sensor Ambient Light Sensing:
Adjustable

Sensor Adjustments:
Time, ambient light & sensitivity

Sensor Detection:
360° detection pattern

Optical

BUG Rating:
B2 U1 G1

Copyright © 2025 RAB Lighting All Rights Reserved Note: Specifications are subject to change at any time without notice

CLED2X26NMS2

Dimensions

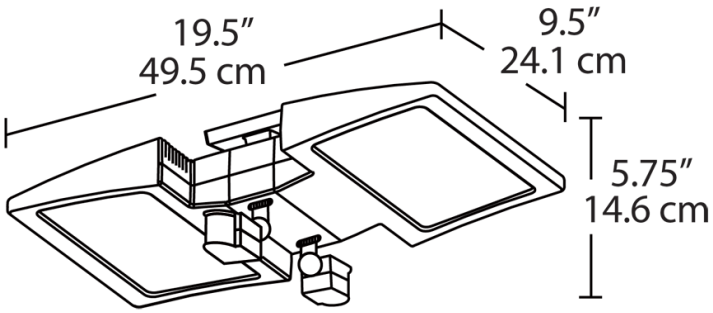

Features

- Reduce energy usage with motion sensor technology you can rely on
- LED combined with mini sensor for an all-in-one lighting solution
- Great for small spaces like utility closets and storage rooms
- 5-Year, No-Compromise Warranty

Copyright © 2025 RAB Lighting All Rights Reserved Note: Specifications are subject to change at any time without notice