CLED2X26W

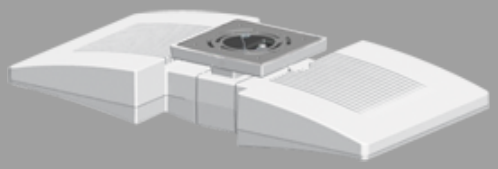

52 Watts of energy efficient ceiling mounted LED lighting. 100,000-hour LED lifespan. 5-year, no-compromise warranty. Flush mount fixture bracket. LED Light Engine included.

Color: White

Weight: 10.3 lbs

Project:	**Type:**
Prepared By:	**Date:**

Driver Info

Type	Constant Current
120V	0.48A
208V	0.30A
240V	0.26A
277V	0.22A
Input Watts	58.7W

LED Info

Watts	52W
Color Temp	5100K (Cool)
Color Accuracy	67 CRI
L70 Lifespan	100,000 Hours
Lumens	5,519 lm
Efficacy	94 lm/W

Technical Specifications

Compliance

UL Listed:
Suitable for wet locations

Performance

Lifespan:
100,000-Hour LED lifespan based on IES LM-80 results and TM-21 calculations

Wattage Equivalency:
Equivalent to 175W Metal Halide

LED Characteristics

Lumen Maintenance:
The LED will deliver 70% of its initial lumens at 100,000 hours of operation

Color Consistency:
7-step MacAdam Ellipse binning to achieve consistent fixture-to-fixture color

Color Stability:
LED color temperature is warrantied to shift no more than 200K in color temperature over a 5-year period

Color Uniformity:
RAB's range of Correlated Color Temperature follows the guidelines of the American National Standard for Specifications for the Chromaticity of Solid State Lighting (SSL) Products, ANSI C78.377-2017.

Construction

Housing:
Precision die-cast aluminum housing, lens frame

Finish:
Formulated for high durability and long-lasting color

Green Technology:
Mercury and UV free. RoHS-compliant components.

Ambient Temperature:
Suitable for use in up to 40°C (104°F)

Cold Weather Starting:
The minimum starting temperature is -40°C (-40°F)

Other

Patents:
The design of the CLED is protected by U.S. Patent D608,040, D615,689 , Canada Patent 821412 and patents pending in China, Taiwan and Mexico.

Warranty:
RAB warrants that our LED products will be free from defects in materials and workmanship for a period of five (5) years from the date of delivery to the end user, including coverage of light output, color stability, driver performance and fixture finish. RAB's warranty is subject to all terms and conditions found at rablighting.com/warranty.

Installation

Mounting Accessory:
Surface mounting box available here.

Optical

BUG Rating:
B2 U1 G2

Electrical

Driver:
Multi-chip 26W high output long life LED Driver Constant Current, 720mA, Class 2, 6kV Surge Protection, 100V-277V, 50-60 Hz, 100-240V.4 Amps.

Copyright © 2025 RAB Lighting All Rights Reserved Note: Specifications are subject to change at any time without notice

Dimensions

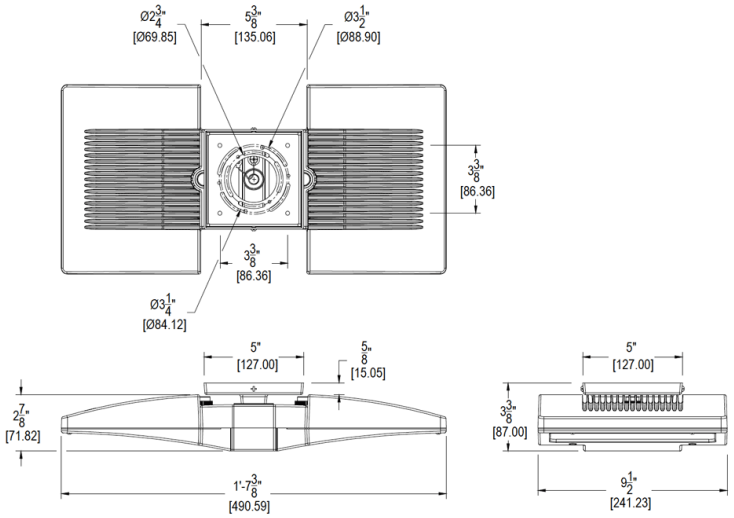

Features

- Flush mount fixture bracket
- Die cast aluminum lens frame with tempered glass and double gasketing
- Fully Shielded, Full Cutoff Optics
- LED Light Engine life delivers 70% of rated lumens at 100,000-hours

Copyright © 2025 RAB Lighting All Rights Reserved Note: Specifications are subject to change at any time without notice