# CLED2X26YMS2W



High performance ceiling mounted LED lighting with mini sensor. Bi-level option available. Flush mount fixture bracket.

Color: White

Weight: 9.5 lbs

| | |
|---|---|
| **Project:** | **Type:** |
| **Prepared By:** | **Date:** |

### Driver Info

| | |
|---|---|
| Type | Constant Current |
| 120V | 0.48A |
| 208V | N/A |
| 240V | N/A |
| 277V | N/A |
| Input Watts | 59W |

### LED Info

| | |
|---|---|
| Watts | 52W |
| Color Temp | 3000K (Warm) |
| Color Accuracy | 82 CRI |
| L70 Lifespan | 100,000 Hours |
| Lumens | 4,285 lm |
| Efficacy | 72.6 lm/W |

## Technical Specifications

### Compliance

**UL Listed:**
Suitable for damp locations

**IESNA LM-79 & LM-80 Testing:**
RAB LED luminaires and LED components have been tested by an independent laboratory in accordance with IESNA LM-79 and LM-80.

### Performance

**Lifespan:**
100,000-Hour LED lifespan based on IES LM-80 results and TM-21 calculations

**Wattage Equivalency:**
Equivalent to 175W Metal Halide

### Installation

**Recommended Mounting Height:**
8-10'

### LED Characteristics

**LEDs:**
(4) 13W Multi-chip high output, long-life LED

**Color Consistency:**
3-step MacAdam Ellipse binning to achieve consistent fixture-to-fixture color

**Color Stability:**
LED color temperature is warrantied to shift no more than 200K in color temperature over a 5-year period

**Color Uniformity:**
RAB's range of Correlated Color Temperature follows the guidelines of the American National Standard for Specifications for the Chromaticity of Solid State Lighting (SSL) Products, ANSI C78.377-2017.

**Color Temperature:**
3000K

### Construction

**Cold Weather Starting:**
The minimum starting temperature is -40°C (-40°F)

**Ambient Temperature:**
Suitable for use in up to 35°C (95°F)

**Housing:**
Precision die-cast aluminum housing and lens framing

**Gaskets:**
High-temperature silicone

**Finish:**
Formulated for high durability and long-lasting color

**Green Technology:**
Mercury and UV free. RoHS-compliant components.

### Other

**Patents:**
RAB CLED2X26 are protected by patents in US pat. D634,879 CN ZL20103067978.

**Warranty:**
RAB warrants that our LED products will be free from defects in materials and workmanship for a period of five (5) years from the date of delivery to the end user, including coverage of light output, color stability, driver performance and fixture finish. RAB's warranty is subject to all terms and conditions found at rablighting.com/warranty.

### Electrical

**Voltage:**
120V AC 60Hz

**Drivers (2):**
Constant Current, Class 2, 100V-277V, 50/60 Hz, 6kv Surge Protection, 720mA, 100-277VAC 0.8 Amps, THD less than equal to 20%, Power Factor 99.2%.

### Sensor Settings

**Sensor Switching Capacity:**
5 Amps, 450W LED @ 120 Volts 0.8pF Driver; 5 Amps, 300W LED @ 120 Volts 0.5pF Driver.


Copyright © 2025 RAB Lighting All Rights Reserved Note: Specifications are subject to change at any time without notice

## Technical Specifications (continued)

**Sensor Time Adjustment:**
5 seconds to 15 minutes

**Sensor Quick Test Time:**
5 second test time for fast installation. Works day or night.

**Sensor "No Hands" Auto Testing:**
Auto mode starts after 4 minutes of testing. No adjustment needed.

**Sensor Photoelectric Control:**
Deactivates lights during daylight. Fully adjustable for 24 hour operation or custom applications.

**Sensor LED Detection Indicator:**
LED glows red day & night for "on guard" deterrence

**Sensor RF Immunity:**
Circuits fully shielded for maximum radio frequency immunity

**Sensor Ratings:**
5 amps

**Sensor Power Consumption:**
Negligible

**Sensor Manual Switch:**
None

**Sensor Ambient Light Sensing:**
Adjustable

**Sensor Adjustments:**
Time, ambient light & sensitivity

**Sensor Detection:**
360° detection pattern

### Optical

**BUG Rating:**
B2 U1 G1


Copyright © 2025 RAB Lighting All Rights Reserved Note: Specifications are subject to change at any time without notice

# CLED2X26YMS2W

### Dimensions

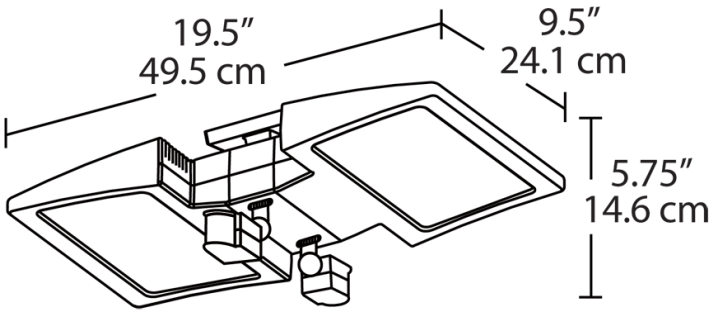


### Features

- Reduce energy usage with motion sensor technology you can rely on
- LED combined with mini sensor for an all-in-one lighting solution
- Great for small spaces like utility closets and storage rooms
- 5-Year, No-Compromise Warranty


Copyright © 2025 RAB Lighting All Rights Reserved Note: Specifications are subject to change at any time without notice