EXPLOSIONPROOF INSTALLATION INSTRUCTIONS



Ceiling



Wall



Pendant

Thank you for buying RAB lighting fixtures. Our aim is to design the best quality products to get the job done right. We'd like to hear your comments. Call the Marketing Department at 888-RAB-1000, or email: marketing@rabweb.com

IMPORTANT

READ CAREFULLY BEFORE INSTALLING FIXTURE. RETAIN THESE INSTRUCTIONS FOR FUTURE REFERENCE.
RAB fixtures must be wired in accordance with the National Electrical Code and all applicable local codes. Proper grounding is required for safety. This product must be installed in accordance with the applicable installation code by a person familiar with the construction and operation of the product and the hazards involved.

WARNING: TO PREVENT IGNITION OF HAZARDOUS ATMOSPHERES, THE SUPPLY CIRCUIT SHOULD BE DISCONNECTED WHEN INSTALLING, RELAMPING OR PERFORMING ANY MAINTENANCE ON THE LUMINAIRE. DO NOT OVERTIGHTEN SCREWS. DO NOT DISASSEMBLE PRODUCT.

CAUTION: When installing luminaire in hazardous locations, check the operating temperature limits prior to installation to be sure it conforms to the environment temperature restriction and NEC classifications of the installation location. Check the fixture's metal nameplate for temperature (T) ratings.

PENDANT MOUNTING

WARNING: Use conduit and connectors suitable for the application. Seal all conduit using approved NEC procedures and local codes.

1. Pendant requires 1/2" or 3/4" NPT threaded conduit pipe (provided by others)
2. Feed supply wires through the pipe into the **EP Cap**. Wire connections must be made in **EP Cap.** See wiring details section.
3. Place wires back into **EP Cap**. Tighten **Inspection Plug** with a wrench.
4. Fully thread the **Globe Holder** onto the **EP Cap**. Tighten with the **Thumb screw**.
5. To install lamp, see Lamp Installation section.
6. Be sure to close any unused wiring entrances with closure plugs provided.

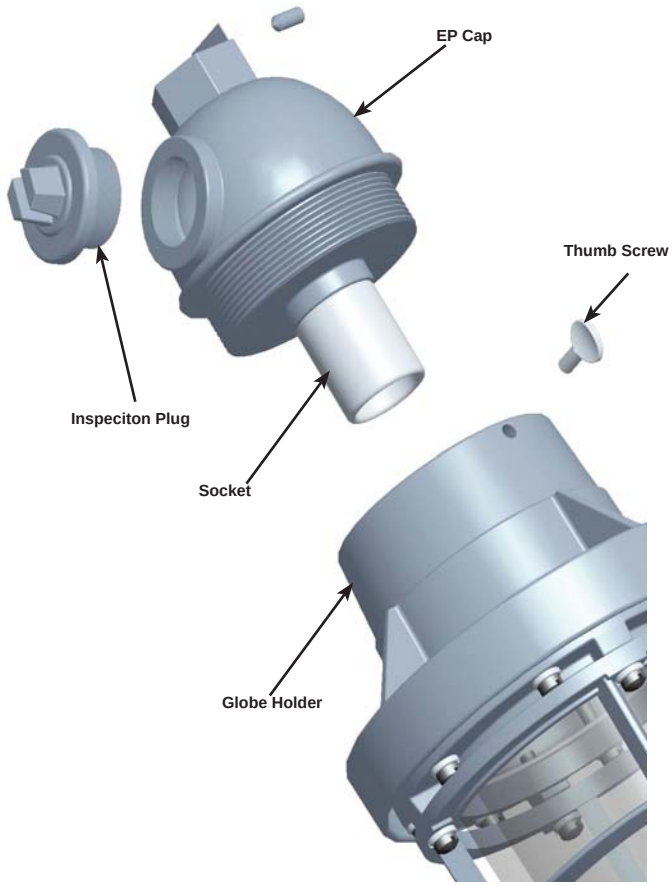

EXPLOSIONPROOF INSTALLATION INSTRUCTIONS

CEILING MOUNTING

WARNING: Use conduit and connectors suitable for the application. Seal all conduit using approved NEC procedures and local codes.

1. Do not separate screws on **EX Junction Box and E1 housing**.
2. Feed supply wires through the **EX Junction Box** and into the **E1 Housing**.
3. Mount **EX Junction Box** to surface using the **(2) Mounting Tabs.** Use hardware suitable for the mounting surface.
4. Wire connections must be made inside the **E1 Housing.** See wiring details section.
5. Place wires back into **E1 Housing**. Tighten **Inspection Plug** with a wrench.
6. To install lamp, see Lamp Installation section.
7. Fully thread the **Globe Holder** onto the **E1 Housing**. Tighten with the **Thumb screw**.
8. Be sure to close any unused wiring entrances with closure plugs provided.

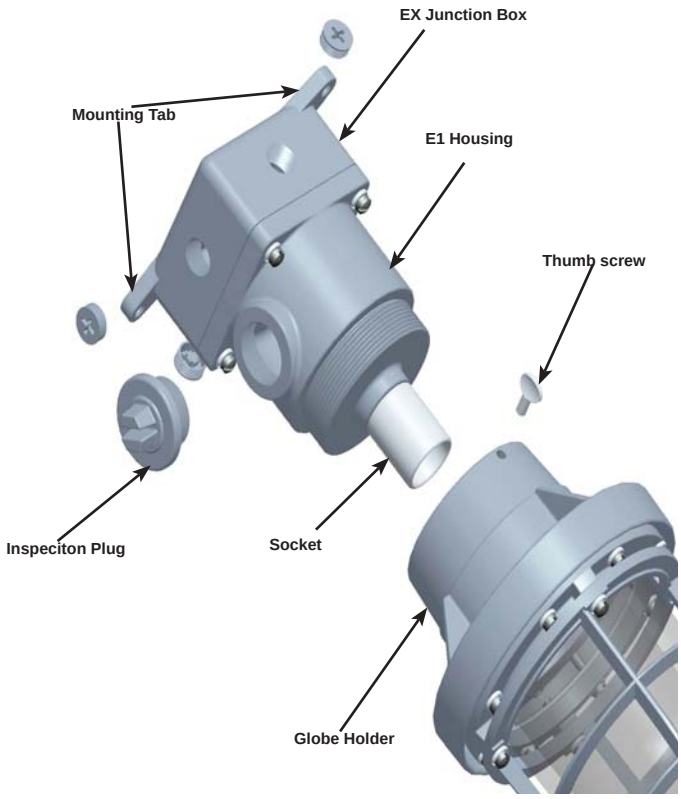

BRACKET MOUNTING

WARNING: Use conduit and connectors suitable for the application. Seal all conduit using approved NEC procedures and local codes.

1. Do not separate **EX Junction Box, EB Bracket and E1 housing.**
2. Feed supply wires through the **EB Bracket and E1 Housing**. Wire connections must be made in **E1 Housing.** See wiring details section.
3. Mount **EX Junction Box** to surface using the **(2) Mounting Tabs.** Use hardware suitable for the mounting surface.
4. Place wires back into **E1 Housing**. Tighten **Inspection Plug** with a wrench.
5. To install lamp, see Lamp Installation section.
6. Fully thread the **Globe Holder** onto the **E1 Housing**. Tighten the **Thumb screw**.
7. Be sure to close any unused wiring entrances with closure plugs provided.

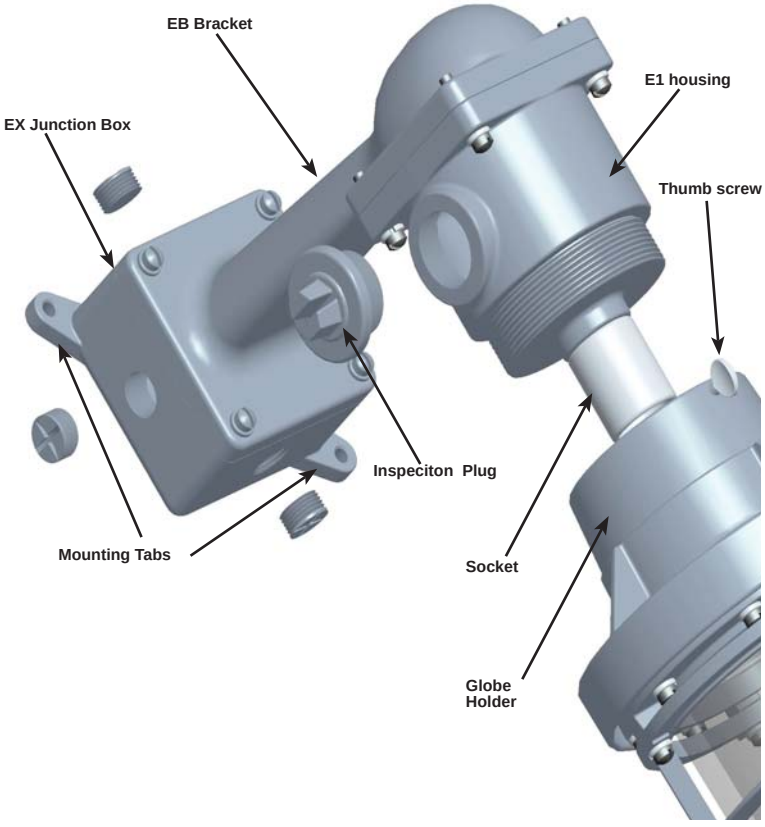

EXPLOSIONPROOF INSTALLATION INSTRUCTIONS

LAMP INSTALLATION/RE-LAMP

CAUTION: Prior to installing, check that the lamp is the correct wattage and size.
WARNING: The Globe is tempered glass, do not scratch or chip.

1. Disconnect power. Make sure fixture and lamp are cool enough to touch.
2. Loosen **Thumb Screw** and remove **Globe Holder Assembly** by unscrewing counter clockwise
3. Install/replace incandescent lamp. See Lamp Replacement section for more details.
4. Fully screw lamp into socket.
5. Replace **Globe Holder Assembly**. Screw on tightly and tighten **Thumb Screw**.

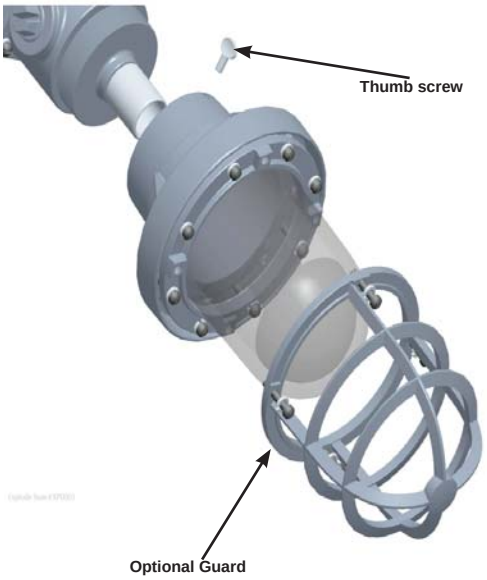

LAMP REPLACEMENT

All fixtures are rated 250V maximum. See chart shown below for maximum lamp wattage:

Hazardous Locations (*)		Maximum Lamp Wattage(**)		
		No Reflector	Standard Dome Reflector	Angle Reflector
Class	Group			
I	C & D	300W	300W	300W
II	E & F	200W	150W	200W
III	E, F &G	100W	-	150W

(*) Fixtures Listed for use in Class II, Group G hazardous locations are also suitable for use in Class III locations.
(**) Maximum lamp sizes are as follows
300W - PS25; 200W - PS25
150W - PS23; 100W - A19

WIRING DETAILS

CAUTION: Make all connections in accordance with accepted NEC wiring procedures and local codes.

1. Connect the black fixture lead to HOT supply lead.
2. Connect the “COM” fixture lead to the COMMON supply lead.
3. Connect the Ground lead to supply ground.

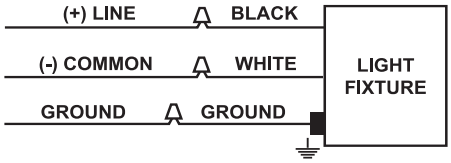

CLEANING & MAINTENANCE

CAUTION: Be sure fixture temperature is cool enough to touch. Do not clean or maintain while fixture is energized.

1. Clean glass lens with non-abrasive glass cleaning solution.
2. As lamps age, light output diminishes. Mass relamping at regular intervals ensures full light output at the highest efficiency.
3. To re-lamp do not remove globe or guard. Remove entire globe holder assemly. See Lamp Installation section.

Note: These instructions do not cover all details or variations in equipment nor do they provide for every possible situation during installation, operation or maintenance.

© 2011 RAB LIGHTING Inc.
Northvale, New Jersey 07647 USA

Easy Installation & Product Help

Tech Help Line	*Toll Free Fax*	*rabweb.com*	*e-mail*
Call our experts	Send a fax to RAB	Visit our website	Answered promptly
888 RAB-1000	888 RAB-1232	for product info	sales@rabweb.com