GDBAYLED78P

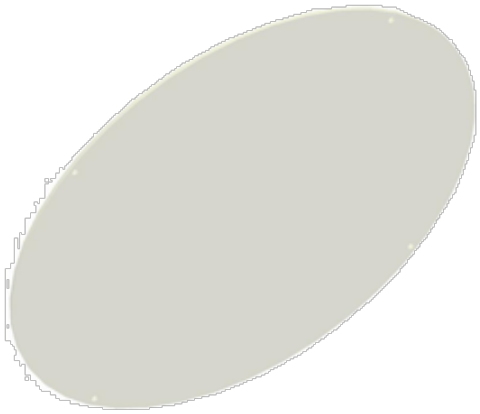

Available accessories include polyshield and wire guards, replacement lens and frame, and an occupancy sensor.

Weight: 1.0 lbs

Project:	Type:
Prepared By:	Date:

Technical Specifications

Performance

Description:
Guard polyshield for highbay 78W LED with stainless steel screws

Compliance

Trade Agreements Act Compliant:
This product is a product of Cambodia and a "designated country" end product that complies with the Trade Agreements Act

Electrical

THD:
6.1% at 120V, 10.1% at 277V

Copyright © 2025 RAB Lighting All Rights Reserved Note: Specifications are subject to change at any time without notice

GDBAYLED78P

Dimensions

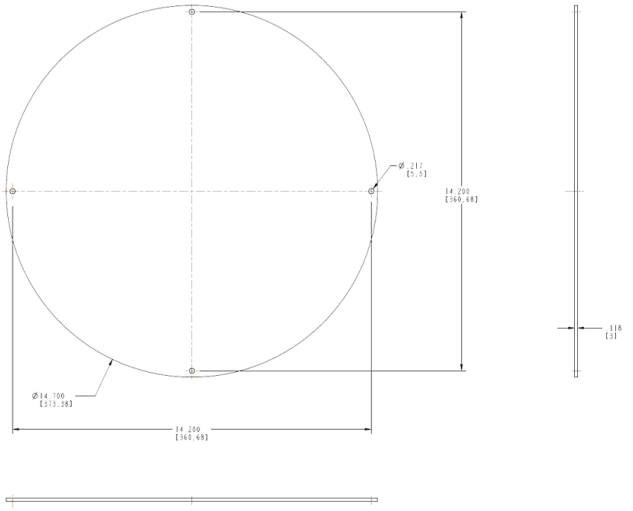

Features

- Fully compatible with BAYLED and AISLED fixtures
- Commercial grade
- For assistance in ordering please contact RAB customer service 1 888-RAB-1000

Copyright © 2025 RAB Lighting All Rights Reserved Note: Specifications are subject to change at any time without notice