LOSBAY800

BAY SENSOR

Installation Manual

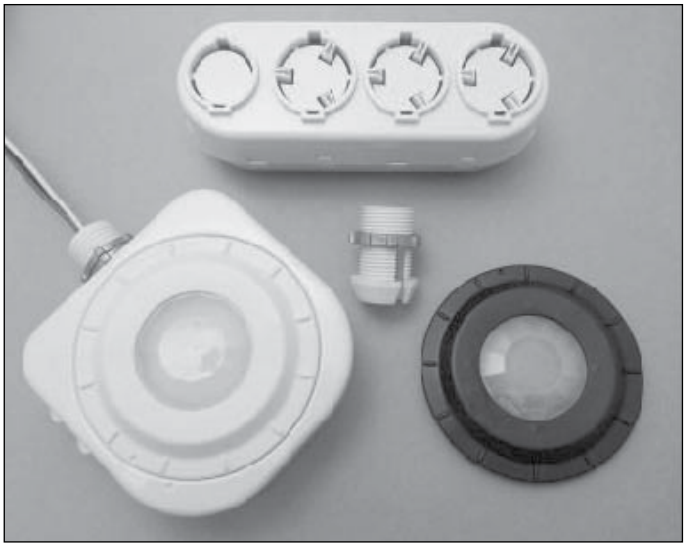

LOSBAY800 Specifications

Coverage Area:	**50'- 60' diameter @ 40' height**
Time Delay:	**30 seconds to 30 minutes**
Photocell Adjustment:	**3.7 fc to185 fc (40 - 2000 Lux)**
Operating Temperature:	**-10°C to 70°C (14°F to 160°F)**
Relative Humidity:	**20-85%**
Power Consumption:	**2W@120V, 1W@277V, 0.8W @347V**
Switching Capacity:	
120VAC:	**800VA - 6.67A, 50/60 Hz**
277VAC:	**1200VA - 4.33A, 50/60 Hz**
347VAC:	**1500VA - 4.32A, 50/60 Hz**

RAB LIGHTING

CAUTION: For your own safety and to prevent damage to the unit, turn off ALL power by removing the power fuse or turning off the circuit breaker.

- Please read the entire Installation Manual before proceeding.
- All wiring should comply with local electrical codes and requires a qualified electrician.
- Use this device with copper or copper clad wire only. With aluminium wire use devices marked CO/ALR or CU/AL only.
- Be sure the total lighting load connected to the LOSBAY800 does not exceed the following ratings:
  120VAC: 800VA - 6.67A, 50/60 Hz
  277VAC: 1200VA - 4.33A, 50/60 Hz
  347VAC: 1500VA - 4.32A, 50/60 Hz
- INSTANT START FLUORESCENT BALLASTS MAY NOT BE RATED FOR USE WITH ANY KIND OF OCCUPANCY SENSOR.
- THE LOSBAY800 CANNOT BE USED WITH DIMMERS.
- Operating Temperature:
  -10°C to 70°C (14°F to 160°F)
  Relative Humidity:20-85%
- Power Consumption:
  2W@120V,
  1W@277V,
  0.8W @347V

Warmup:
After the power is turned ON, allow 2 minutes for warm up. The controlled lights will be on for the entire 2 minutes. After warm up is complete the unit will operate according to set time delay and lux settings.

LED:
The sensor has an internal green LED, visible through the lens, which activates when motion is detected.

Time:
This 'Time' knob controls the amount of time lights stay ON after the last detected motion. Settings varying from 30 seconds to 30 minutes.

Photocell:
The 'Lux' knob controls the light level at which the sensor will switch on the lights when movement is detected. If set to the maximum ("sun") it will switch during most lighting conditions. If set to minimum ("moon") the sensor will only operate at dusk or light conditions darker than dusk. This is the ideal position for general early evening and night operation.

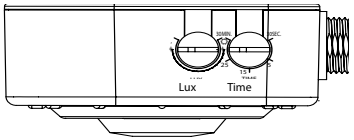

How Do RAB Occupancy Sensors Work?

The L0SBAY800 sensor "sees" infrared heat changes caused by movement within the detection zone and turns on lights automatically.

How long do the lights stay on?
Lights stay on as long as motion is detected. The controlled lights (on the same circuit) will remain ON until no more motion is detected and the pre-set time-delay has expired. You can adjust the delay from 30 seconds to 30 minutes.

How much motion is necessary to keep lights on?
In order to activate the sensor, the source of heat must move from one zone of detection to another. It is recommended to mount the sensor at least 6' away from heating, cooling and ventilation perpendicular to the direction of movement.

360°
Top View

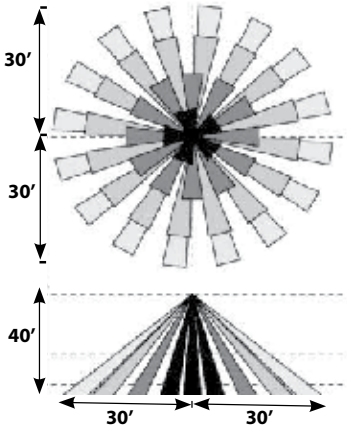

How large an area does the LOSBAY800 cover?

The Bay Lens and Aisle Lens are designed for 20' to 40' mounting heights with a symmetrical coverage pattern of 50' to 60' in diameter.

Aisle
Top View

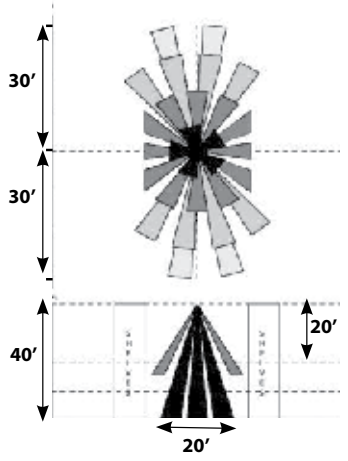

Selecting A Location

Locate the LOSBAY800 where it has an unobstructed view of the area, particularly the areas normally occupied by people.

If people can not see the sensor lens from their normal positions in the area, the sensor will not detect their presence.

High shelving, pallet racks, walls, columns, doors and other obstructions may limit the sensors view. If obstructions can be moved, the sensor will have a better view. If the obstructed areas are not normally occupied, the sensor will still see sufficient activity to operate properly.

Several sensors may be needed to cover large or oddly shaped areas.

Warehouses can have ambient temperature variations that may affect sensor detection and coverage location. High temperatures at the covered area (above 89-92°F) reduce the detection zone of the sensor. Consider adding more sensors if ambient temperatures are expected to be high. High floor level temperature may require larger movement for detection. In some cases, sensors mounted above 40' may only detect large heat signatures such as forklift trucks.

When Heating, Ventilating or Air Conditioning (HVAC) registers turn on they create turbulence which can cause the sensor to activate. It is important that the sensor and HVAC register be separated by at least 6'.

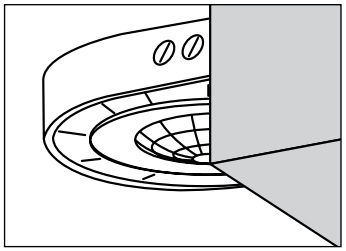

INCORRECT

- Sensor mounted too high
- Outer beams are obstructed
- Field-of-view is limited

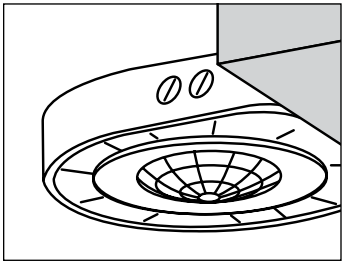

CORRECT

- Sensor mounted 1" off bottom
- No obstruction
- Optimum field-of-view

Lens Installation

1. The sensor is supplied with two lenses, a factory installed 360° Bay Lens and an optional un-installed Aisle Lens (black color trim ring) .
2. To change lens, turn the trim ring so that the two indented dots line up and pull out by the finger tabs.
3. To insert the black aisle lens, line up the indented dots and the tabs on underside of lens and insert into key openings and turn clockwise.
4. Turn the lens clockwise further to orient the aisle direction from 0° to 90°. Location of dots for respective positions is illustrated below.

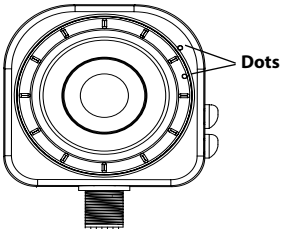

Line up the dots and pull up tab to remove 360° lens

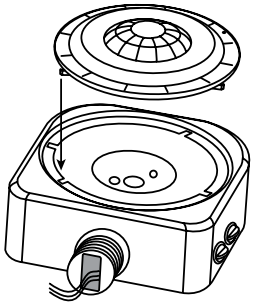

Insert aisle lens with dots lined up

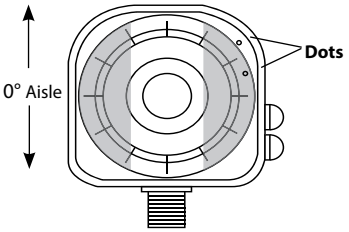

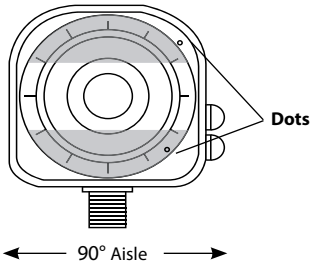

Turn clockwise to change aisle direction

Mounting

BAYLED Mounting

1. The LOSBAY800 sensor threads into a 1/2" NPS hole on the end of a housing or junction box. To mount to BAYLED use stem as shown. LOSBAYMK can be ordered separately if needed.
2. Thread locknuts onto to each side of 6" minimum 1/2" NPS **Stem**.
3. Place adaptor on stem and use third lock nut to secure the back piece of the **Adaptor** to the stem.
4. Mount sensor to front piece of the **Adaptor** in the **Non-Keyed Hole** and tighten it with lock nut.
5. Feed the wires from the sensor through the **Stem** and into the fixture.
6. Snap front and back **Adaptor** pieces together.
7. Mount **Stem** to housing and tighten all locknuts.
8. Connect wires according to wiring diagram.

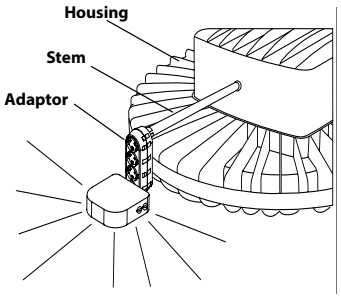

R-Bay Mounting

1. The included adaptor may be used as shown, to expand the sensor's field of view if it is obstructed by the RBAY. As long as sensor is mounted within 1" from the bottom of the fixture, the field of view will not be affected.
2. Threaded snap-in nipple attaches to 1/2" luminaire or electrical box trade size **Knockout Holes**.
3. Adaptor has alternate **Keyholes** for height adjustment.
4. Sensor mounts at the **Non-Keyed Hole**.
5. Wires from sensor to luminaire or electrical box are fed through **Adaptor**.

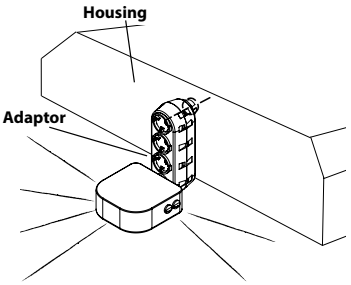

Bracket allows sensor to be mounted to achieve optimum field-of view

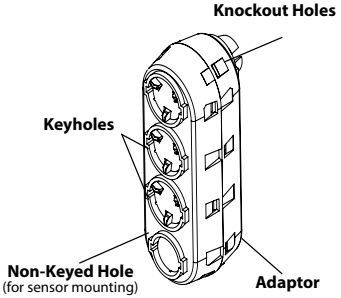

Wiring

Wiring Diagram

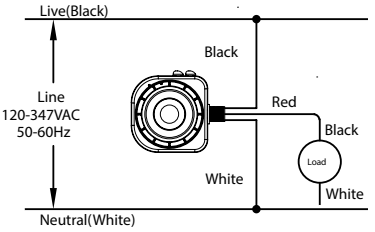

Troubleshooting

Lights do Not Turn On

1. **Circuit breaker or fuse is OFF**: Turn the breaker ON. Ensure lights being controlled are in working order.
2. **Sensor is wired incorrectly or may be defective:** Confirm that the sensor wiring is correct.
3. **Lens is dirty or obstructed:** Inspect the lens visually and clean, if necessary, or remove the obstruction.

Lights Do Not Turn Off

1. **Sensor is wired incorrectly or may be defective**: Confirm that the sensor wiring is correct and inspect visually for problems.
2. **Sensor may be mounted too closely to an air conditioning or heating vent**: Move the sensor or close the vent.
3. **The line voltage has dropped:** Perform the necessary tests to ensure the line voltage does not drop below 100V.

Lights Turn OFF and ON too quickly:

1. **Sensor may be mounted too closely to an air conditioning or heating vent:** Move the sensor or close the vent.
2. **Time set improperly**: Adjust the TIME control knob.

Limited Warranty

Your LOSBAY800 will be replaced or repaired at our option if it proves to be defective in workmanship or materials within five year from the date of original purchase.

For repair or replacement return the product (freight prepaid and insured) to the address on back after packing it carefully. Please include your sales receipt and a description of the problem.

If your unit is out of warranty or the damage is unrelated to the original manufacture, return your unit directly to us with a check for $20 (made payable to RAB Lighting Inc.) for repair or replacement of the unit.

Under no circumstances is RAB Lighting liable for any incidental or consequential damage arising out of or in connection with the use or performance of this product or other indirect damages with respect to loss of property or revenue or cost of installation, removal or re-installation. This warranty gives you specific legal rights which vary from state to state.

c UL US LISTED

Maintenance & Repair

LOSBAY800 requires no maintenance other than keeping the lens area clean and free of obstructions. Clean outer surface with a damp cloth only. Do not attempt to open or repair the sensor. There are dangerous voltages inside the case, and no user serviceable parts. Opening the sensor voids the warranty. For repair service, follow your warranty instructions.

Note: *These instructions do not cover all details or variations in equipment nor do they provide for every possible situation during installation, operation or maintenance.*

RAB LIGHTING
©2012 RAB LIGHTING Inc.
Northvale, New Jersey 07647 USA

Easy Installation & Product Help

Tech Help Line
Call our experts 888 RAB-1000

rabweb.com
Visit our website for product info

email
Answered promptly sales@rabweb.com

RAB LIGHTING

GDBAYLEDW WIRE GUARD

Thank you for buying RAB lighting fixtures. Our goal is to design the best quality products to get the job done right. We'd like to hear your comments. Call the Marketing Department at 888-RAB-1000, or email: marketing@rabweb.com

IMPORTANT

READ CAREFULLY BEFORE INSTALLING FIXTURE. RETAIN THESE INSTRUCTIONS FOR FUTURE REFERENCE.

RAB fixtures must be wired in accordance with the National Electrical Code and all applicable local codes. Proper grounding is required for safety. This product must be installed in accordance with the applicable installation code by a person familiar with the construction and operation of the product and the hazards involved.

WARNING: Make certain power is OFF before installing or maintaining fixture.

INSTALLATION

Wire Guard mounts with four stainless steel **Screws** to door as shown. Hardware is provided with guard. Guard and shield may be used together.

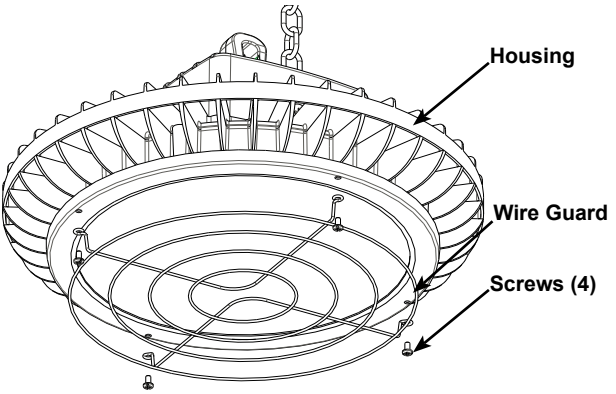

CLEANING

Clean glass lens with nonabrasive glass cleaning solution.

CAUTION: Be sure fixture temperature is cool enough to touch. Do not clean or maintain while fixture is energized.

Note: These instructions do not cover all details or variations in equipment nor do they provide for every possible situation during installation, operation or maintenance.

©2012 RAB LIGHTING Inc.
Northvale, New Jersey 07647 USA

Easy Installation & Product Help

Tech Help Line
Call our experts 888 RAB-1000

rabweb.com
Visit our website for product info

email
Answered promptly sales@rabweb.com

GDBAYLEDP POLY SHIELD

Thank you for buying RAB lighting fixtures. Our goal is to design the best quality products to get the job done right. We'd like to hear your comments. Call the Marketing Department at 888-RAB-1000, or email: marketing@rabweb.com

IMPORTANT

READ CAREFULLY BEFORE INSTALLING FIXTURE. RETAIN THESE INSTRUCTIONS FOR FUTURE REFERENCE.

RAB fixtures must be wired in accordance with the National Electrical Code and all applicable local codes. Proper grounding is required for safety. This product must be installed in accordance with the applicable installation code by a person familiar with the construction and operation of the product and the hazards involved.

WARNING: Make certain power is OFF before installing or maintaining fixture.

INSTALLATION

Polyshield mounts with four stainless steel **Screws** to door as shown. Hardware is provided with guard. Guard and shield may be used together.

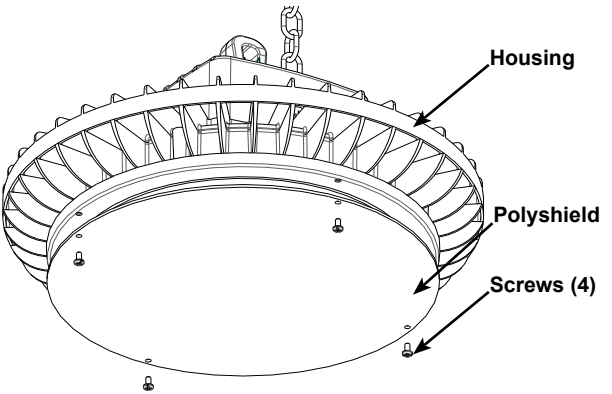

CLEANING

Clean glass lens with nonabrasive glass cleaning solution.

CAUTION: Be sure fixture temperature is cool enough to touch. Do not clean or maintain while fixture is energized.

Note: These instructions do not cover all details or variations in equipment nor do they provide for every possible situation during installation, operation or maintenance.

©2012 RAB LIGHTING Inc.
Northvale, New Jersey 07647 USA

Easy Installation & Product Help

Tech Help Line
Call our experts 888 RAB-1000

rabweb.com
Visit our website for product info

email
Answered promptly sales@rabweb.com

GDBAYLED78FP FROSTED POLY SHIELD

Thank you for buying RAB lighting fixtures. Our goal is to design the best quality products to get the job done right. We'd like to hear your comments. Call the Marketing Department at 888-RAB-1000, or email: marketing@rabweb.com

IMPORTANT

READ CAREFULLY BEFORE INSTALLING FIXTURE. RETAIN THESE INSTRUCTIONS FOR FUTURE REFERENCE.

RAB fixtures must be wired in accordance with the National Electrical Code and all applicable local codes. Proper grounding is required for safety. This product must be installed in accordance with the applicable installation code by a person familiar with the construction and operation of the product and the hazards involved.

WARNING: Make certain power is OFF before installing or maintaining fixture.

INSTALLATION

Frosted Polyshield mounts with (4) **Spacers** and (4) stainless steel **Screws** to door as shown. Hardware is provided with shield.

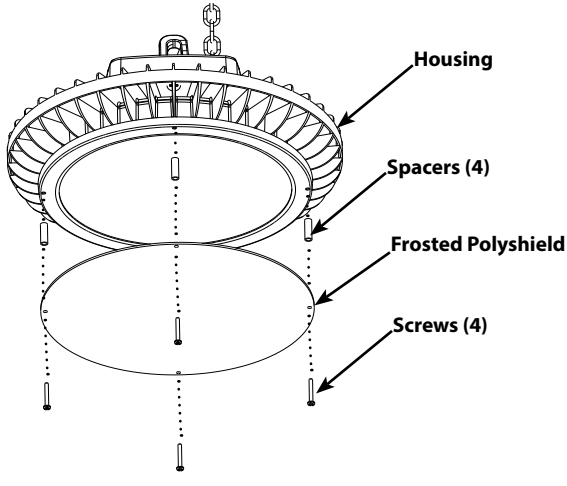

CLEANING

Clean glass lens with nonabrasive cleaning solution.

CAUTION: Be sure fixture temperature is cool enough to touch. Do not clean or maintain while fixture is energized.

Note: These instructions do not cover all details or variations in equipment nor do they provide for every possible situation during installation, operation or maintenance.

©2014 RAB LIGHTING Inc.
Northvale, New Jersey 07647 USA

Easy Installation & Product Help

Tech Help Line
Call our experts 888 RAB-1000

rabweb.com
Visit our website for product info

email
Answered promptly sales@rabweb.com