LRTC



Die cast aluminum wiring box with ground screw, and two sturdy lugs for wall or ceiling mounting. Supplied with four color matched close-up plugs.

Color: Natural

Weight: 0.4 lbs

Project:	Type:
Prepared By:	Date:

Technical Specifications

Compliance

UL Listed:
Suitable for wet locations

Construction

Box Material:
Precision die cast aluminum

Screws:
10-24 Stainless steel Round Head Phillips/slotted

Ground Screw:
10-24 Green corrosion protected steel slotted washer head screw provided in pre-tapped hole

Box Diameter:
3"

Side Hole Thread Size:
1/2"

Copyright © 2025 RAB Lighting All Rights Reserved Note: Specifications are subject to change at any time without notice

Dimensions

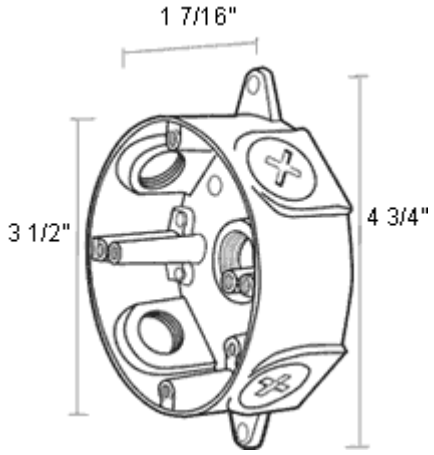

Features

- Stainless steel screws
- Green hex slotted washer head ground screw in pre-tapped hole
- Heavy die cast aluminum
- Close-up plugs allow Phillips or slotted screwdrivers for easy installation

Copyright © 2025 RAB Lighting All Rights Reserved Note: Specifications are subject to change at any time without notice