SLED5YDCW



Square LED Step Lights for solar applications or other 10-30VDC systems. Up to 85% more efficient than line voltage AC solutions. Available in 5W round square step lights. Solar panel, battery and controls by others.

Color: White

Weight: 1.5 lbs

Project:	**Type:**
Prepared By:	**Date:**

Driver Info

Type	DC to DC
120V	N/A
208V	N/A
240V	N/A
277V	N/A
Input Watts	5.3W

LED Info

Watts	5W
Color Temp	3000K (Warm)
Color Accuracy	87 CRI
L70 Lifespan	100,000 Hours
Lumens	128 lm
Efficacy	24.2 lm/W

Technical Specifications

Compliance

UL Listed:
Suitable for wet locations. Suitable for mounting within 4ft. of the ground.

IESNA LM-79 & LM-80 Testing:
RAB LED luminaires and LED components have been tested by an independent laboratory in accordance with IESNA LM-79 and LM-80.

Dark Sky Conformance:
Allows for conformance to the IDA's fully shielding requirement, emitting no light above 90 degrees.

Electrical

THD:
11.5% at 120V, 21% at 277V

Electrical Input Specifications:
MaxW = 5.1W, Input Volts = 10-30V DC, Input Amps = 0.51 - 0.17A.

Surge Protection:
1000 Volts

Performance

Lifespan:
100,000-Hour LED lifespan based on IES LM-80 results and TM-21 calculations

Wattage Equivalency:
Equivalent to 13W CFL or 60W Incandescent

Construction

Finish:
Formulated for high durability and long-lasting color

Cold Weather Starting:
The minimum starting temperature is -40°C (-40°F)

Maximum Ambient Temperature:
Suitable for use in up to 40°C (104°F)

Green Technology:
Mercury and UV free. RoHS-compliant components.

Housing:
Precision die-cast aluminum housing and mounting plate (junction box not included)

Gaskets:
High-temperature silicone

LED Characteristics

Color Consistency:
3-step MacAdam Ellipse binning to achieve consistent fixture-to-fixture color

Lumen Maintenance:
The LED will deliver 70% of its initial lumens at 100,000 hours of operation

Color Temperature:
3000K

Other

Patents:
The design of the SLED Lights are protected by U.S. Pat. 612,975, Canada Pat. 133101, and China Pat. ZL201030129140.1.

Equipment:
Solar panel, battery and controls by others

Warranty:
RAB warrants that our LED products will be free from defects in materials and workmanship for a period of five (5) years from the date of delivery to the end user, including coverage of light output, color stability, driver performance and fixture finish. RAB's warranty is subject to all terms and conditions found at rablighting.com/warranty.

Copyright © 2025 RAB Lighting All Rights Reserved Note: Specifications are subject to change at any time without notice

Dimensions

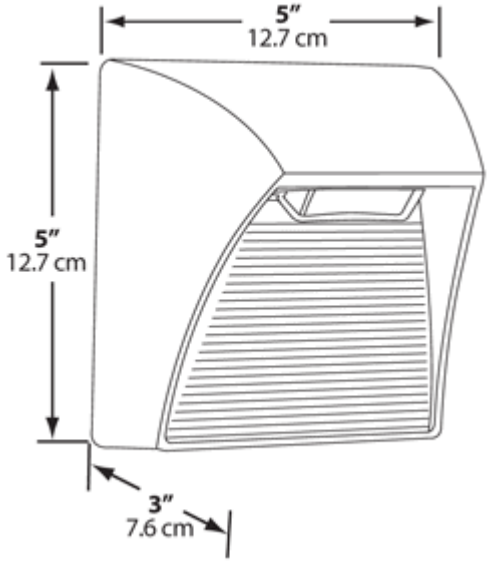

Copyright © 2025 RAB Lighting All Rights Reserved Note: Specifications are subject to change at any time without notice