SLED™ DC INSTALLATION INSTRUCTIONS

Thank you for buying RAB lighting fixtures. Our goal is to design the best quality products to get the job done right. We'd like to hear your comments. Call the Marketing Department at 888-RAB-1000, or email: marketing@rabweb.com



SLED
Square



SLEDR
Round

IMPORTANT

READ CAREFULLY BEFORE INSTALLING FIXTURE. RETAIN THESE INSTRUCTIONS FOR FUTURE REFERENCE.
RAB fixtures must be wired in accordance with the National Electrical Code and all applicable local codes. Proper grounding is required for safety. THIS PRODUCT MUST BE INSTALLED IN ACCORDANCE WITH THE APPLICABLE INSTALLATION CODE BY A PERSON FAMILIAR WITH THE CONSTRUCTION AND OPERATION OF THE PRODUCT AND THE HAZARDS INVOLVED.

WARNING: Make certain power is OFF before installing or maintaining fixture. No user serviceable parts inside.

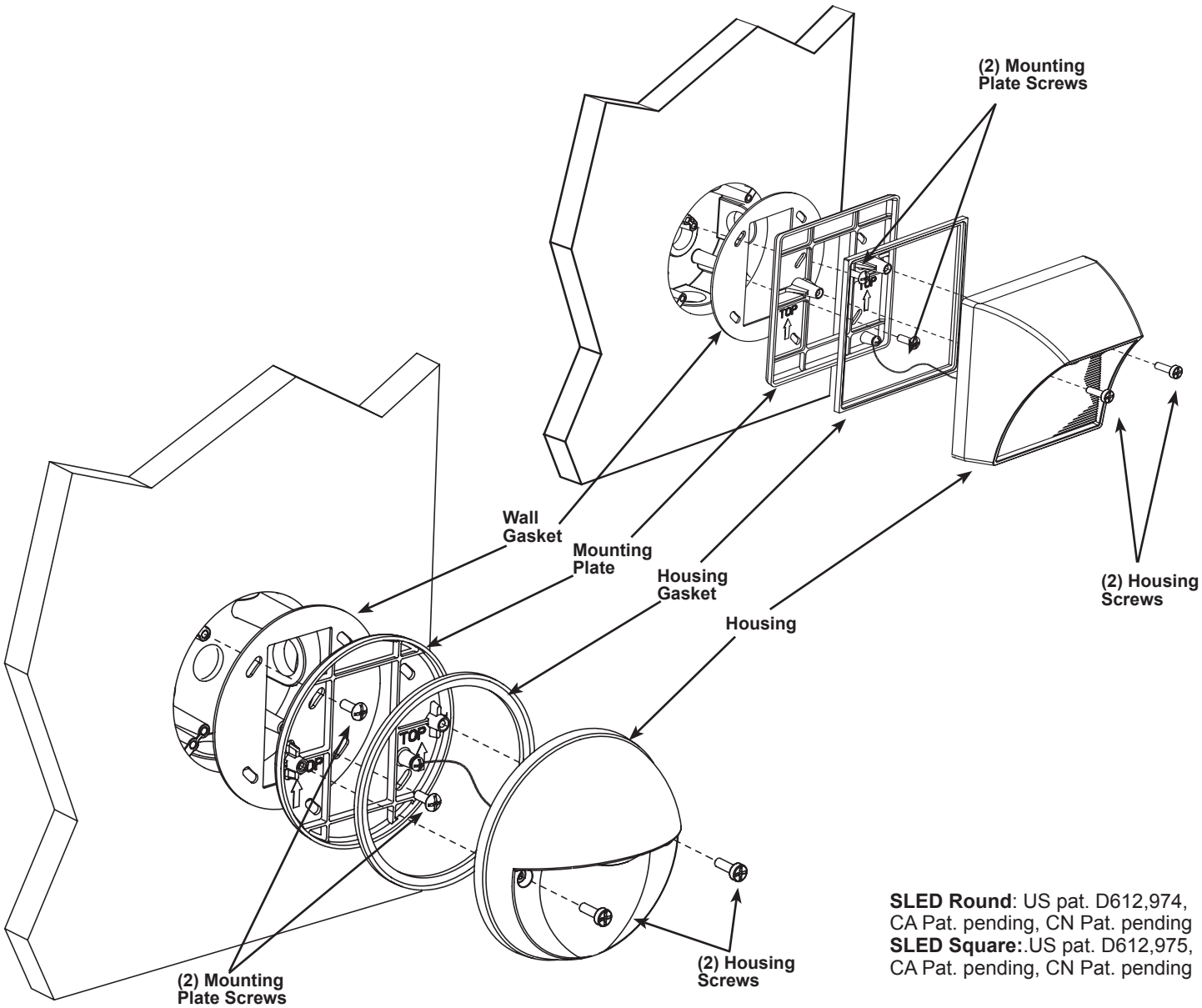

SLED Round: US pat. D612,974, CA Pat. pending, CN Pat. pending
SLED Square:.US pat. D612,975, CA Pat. pending, CN Pat. pending

SLED™ DC INSTALLATION INSTRUCTIONS

MOUNTING

Secure the SLED steplight to any indoor or outdoor recessed or surface junction box.

1. Loosen **Housing Screws** and remove **Mounting Plate**. Screws will remain in place with O-ring retaining gaskets. Fixture may hang from the tether while installing.
2. Place **Wall Gasket** and **Mounting Plate** over recessed box.
3. Attach **Mounting Plate** with supplied **Mounting Plate Screws.**
4. Pull supply wires from box through mounting plate and wire fixture as shown in the wiring section.
5. Check **Housing Gasket.** It should remain firmly around the inside of the **Housing.**
6. Align **Housing** to **Mounting Plate**.
7. Make sure all gaskets are properly seated. Tighten **Housing Screws.**
8. If outdoor surface is irregular, use caulk to seal any gaps around the **Mounting Plate.**

TROUBLESHOOTING

1. Check that the line voltage at fixture is correct. Refer to wiring directions.
2. Is the fixture grounded properly?
3. Is the photocell is functioning properly (if used)?

WIRING

Universal DC voltage driver permits operation at 10VDC to 30VDC.

1. Connect the WHITE fixture lead to the (+) supply lead.
2. Connect the BLACK fixture lead to the (-) supply lead.
3. Connect the bare copper Ground wire from fixture to supply ground.

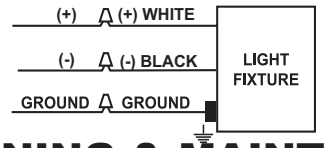

CLEANING & MAINTENANCE

CAUTION: Be sure fixture temperature is cool enough to touch. Do not clean or maintain while fixture is energized.

1. Clean glass lens with non-abrasive glass cleaning solution.
2. Do not remove LED lens to clean the LED. Do not touch the LED.

Note: These instructions do not cover all details or variations in equipment nor do they provide for every possible situation during installation, operation or maintenance.

SLED5 Cool LED Square Steplight

RAB

lighting facts℠
A Program of the U.S. DOE

Light Output (Lumens)	196
Watts	5.3
Lumens per Watt (Efficacy)	37
Color Accuracy Color Rendering Index (CRI)	68

Light Color
Correlated Color Temperature (CCT) 5054 (Daylight)

Warm White | Bright White | Daylight

2700K 3000K 4500K 6500K

All results are according to IESNA LM-79-2008: *Approved Method for the Electrical and Photometric Testing of Solid-State Lighting.* The U.S. Department of Energy (DOE) verifies product test data and results.

Visit www.lightingfacts.com for the *Label Reference Guide.*

Registration Number: WVMA-BX5KZF
Model Number: SLED5

SLEDR5 Cool LED Round Steplight

RAB

lighting facts℠
A Program of the U.S. DOE

Light Output (Lumens)	213
Watts	5.2
Lumens per Watt (Efficacy)	41
Color Accuracy Color Rendering Index (CRI)	68

Light Color
Correlated Color Temperature (CCT) 4859 (Daylight)

Warm White | Bright White | Daylight

2700K 3000K 4500K 6500K

All results are according to IESNA LM-79-2008: *Approved Method for the Electrical and Photometric Testing of Solid-State Lighting.* The U.S. Department of Energy (DOE) verifies product test data and results.

Visit www.lightingfacts.com for the *Label Reference Guide.*

Registration Number: WVMA-P84BYF
Model Number: SLEDR5

RAB LIGHTING

© 2011 RAB LIGHTING Inc.
Northvale, New Jersey 07647 USA
SLED DC-IN-1012

Easy Installation & Product Help

Tech Help Line	*Toll Free Fax*	*rabweb.com*	*e-mail*
Call our experts	Send a fax to RAB	Visit our website	Answered promptly
888 RAB-1000	888 RAB-1232	for product info	sales@rabweb.com