INSTRUCTIONS
SLED® INSTALLATION

RAB Lighting is committed to creating high-quality, affordable, well-designed and energy-efficient LED lighting and controls that make it easy for electricians to install and end users to save energy. We'd love to hear your comments. Please call the Marketing Department at 888-RAB-1000 or email: marketing@rablighting.com



SLED Square



SLED Round

IMPORTANT

READ CAREFULLY BEFORE INSTALLING FIXTURE. RETAIN THESE INSTRUCTIONS FOR FUTURE REFERENCE.
RAB fixtures must be wired in accordance with the National Electrical Code and all applicable local codes. Proper grounding is required for safety. THIS PRODUCT MUST BE INSTALLED IN ACCORDANCE WITH THE APPLICABLE INSTALLATION CODE BY A PERSON FAMILIAR WITH THE CONSTRUCTION AND OPERATION OF THE PRODUCT AND THE HAZARDS INVOLVED.
WARNING: Make certain power is OFF before installing or maintaining fixture. No user serviceable parts inside.
CAUTION: For proper weatherproof function all gaskets must be seated properly and all screws inserted and tightened firmly. Apply weatherproof silicone sealant around the edge of the ceiling mounting box and/or junction box. This is especially important with an uneven ceiling surface. Silicone all plugs and unused conduit entries.

MOUNTING

Secure the SLED steplight to any indoor or outdoor recessed or surface junction box as shown in **Fig. 1**.

1. Loosen **Housing Screws** and remove **Mounting Plate**. Screws will remain in place with O-ring retaining gaskets. Fixture may hang from the tether while installing.
2. Place **Wall Gasket** and **Mounting Plate** over recessed box.
3. Attach **Mounting Plate** with supplied **Mounting Plate Screws**.
4. Pull supply wires from box through mounting plate and wire fixture as shown in the wiring section (**Fig. 2**).
5. Check **Housing Gasket**. It should remain firmly around the inside of the **Housing**.
6. Align **Housing** to **Mounting Plate**.
7. Make sure all gaskets are properly seated. Tighten **Housing Screws**.
8. If outdoor surface is irregular, use caulk to seal any gaps around the **Mounting Plate**.

Fig: 1

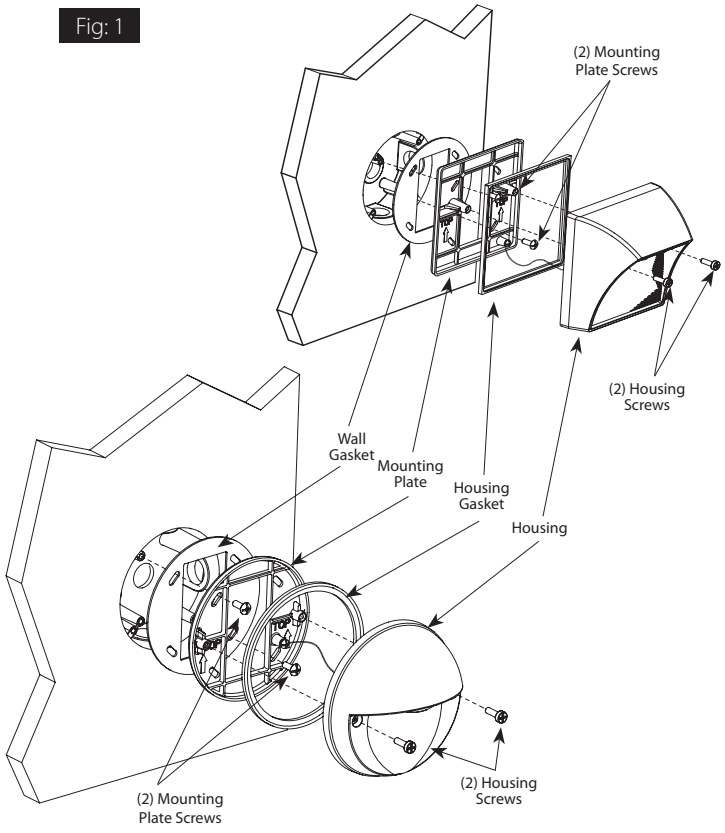

INSTRUCTIONS
SLED® INSTALLATION

RAB Lighting is committed to creating high-quality, affordable, well-designed and energy-efficient LED lighting and controls that make it easy for electricians to install and end users to save energy. We'd love to hear your comments. Please call the Marketing Department at 888-RAB-1000 or email: marketing@rablighting.com

WIRING

Universal voltage driver permits operation at 120V thru 240V, 50 or 60 Hz.

1. Connect the **BLACK** fixture lead to the **LINE** supply lead.
2. Connect the **WHITE** fixture lead to the **COMMON** supply lead
3. Connect the bare copper **GROUND** wire from fixture to supply **GROUND**.

Fig. 2

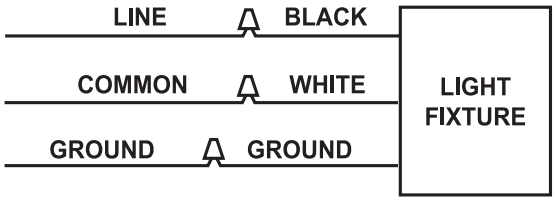

CLEANING & MAINTENANCE

CAUTION: Be sure fixture temperature is cool enough to touch. Do not clean or maintain while fixture is energized.

1. Clean polycarbonate lens & fixture with non-abrasive cleaning solution.
2. Do not open fixture to clean the LEDs. Do not touch the LEDs.

TROUBLESHOOTING

1. Check that the line voltage at the fixture is correct. Refer to wiring directions.
2. Is the fixture grounded properly?

Note: These instructions do not cover all details or variations in equipment nor do they provide for every possible situation during installation, operation or maintenance.

© 2021 RAB LIGHTING Inc.

SLED-IN-0221
73296-RAB

RAB WARRANTY: *RAB's warranty is subject to all terms and conditions found at rablighting.com/warranty*